특징 (Features)

인볼류트 기어

매끄러운 접촉
맞물림율이 적기때문에
충격하중이 발생하면
1~2개의 톱니에
충격이 집중됩니다.

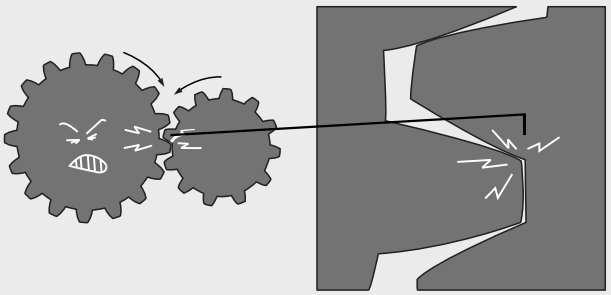

CYCLO감속기

매끄러운 굴림접촉
맞물림율이 인볼류트
기어보다 2~3배 높고,
충격하중이 발생하여도
많은 톱니에서 분산
흡수하므로, 강하고
긴 수명의 감속기입니다.

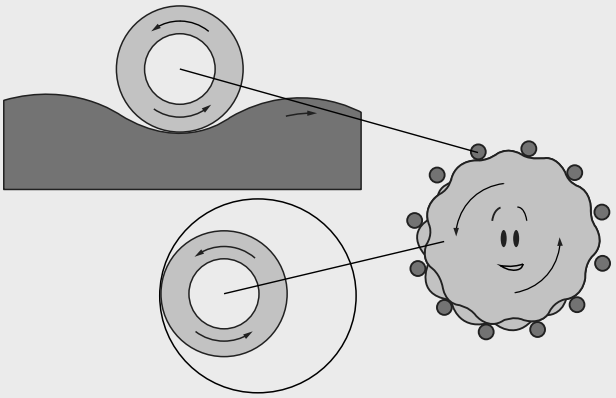

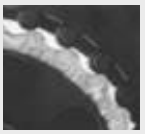

● 효율이 높아 경제적이다. Overall Economy.

1단에서 90%, 2단에서 80%이상으로 고효율을 얻을 수 있어 타 감속기보다 경제적입니다.

Competitive initial cost, high reliability, long life and minimal maintenance give CYCLOID speed reducers superior overall economy when compared to conventional gearboxes.

● 소형 경량이다. Compact Size.

1단에서 1/6~1/119의 감속과 2단, 3단으로 수천에서 수십만 분의 1 감속을 할 수 있어 소형이고 경량화 하였습니다.

Single stage reduction ratios are available from 6:1 to 119:1, double stage up to 7,569:1 and triple stage up to almost 1,000,000:1. Fewer stages provide a much smaller footprint and envelope.

특징 (Features)

● 운전이 원활하고 소음이 적다. Low Noise.

치면이 구름 접촉을 하고, 치면을 정밀 연삭을 하여 운전이 원활하고 소음 진동이 적습니다.

When compared with the sliding tooth contact of conventional gearing, the rolling contact of the CYCLOID system reduces noise levels.

● 기종이 다양하고 보전작업이 용이하다. Maintenance Free Durability

용도에 따라 다양한 취부 형태의 부품이 표준화되어 있어 선택의 폭이 크고, 표준화된 부품과 간단한 구조로 보전 작업이 용이 합니다.

Because of various mounting types of parts as per application, that have already been standardized, it can take a wide room for selection, and it keeps easy maintenance with standard parts and simple structure.

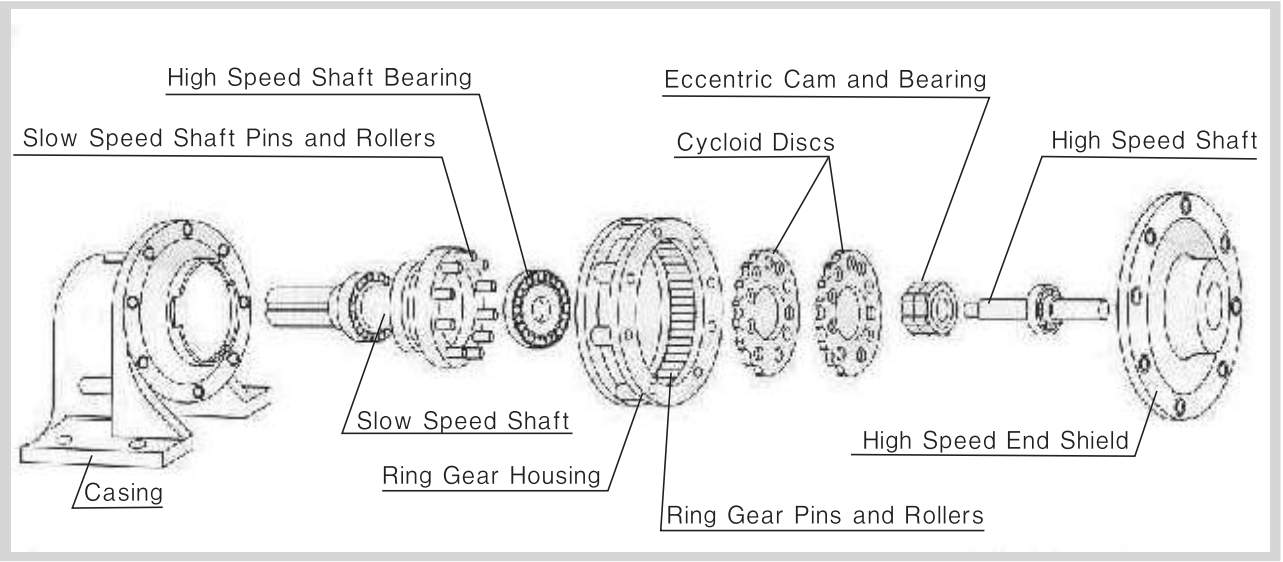

구조 및 원리 (Principle Of Operation)

싸이크로이드 치형 감속기의 구성은 아래 그림의 부품으로 구성 되어 있다.

1) 입력부는 입력축 또는 모터축에 편심캠, 베어링, 오일씰
2) 감속부는 곡선판, 링기어하우징, 핀, 롤러
3) 출력부는 출력샤프트, 베어링, 케이스로 구성된다.

The cycloidal design basically has three major components.

1) Input shaft assembly (high speed) with eccentric cam, roller bearing and oil seals.
2) Cycloid disc, Ringgear Housing, Pin, Bush
3) Output shaft assembly (slow speed) with support bearings and case.

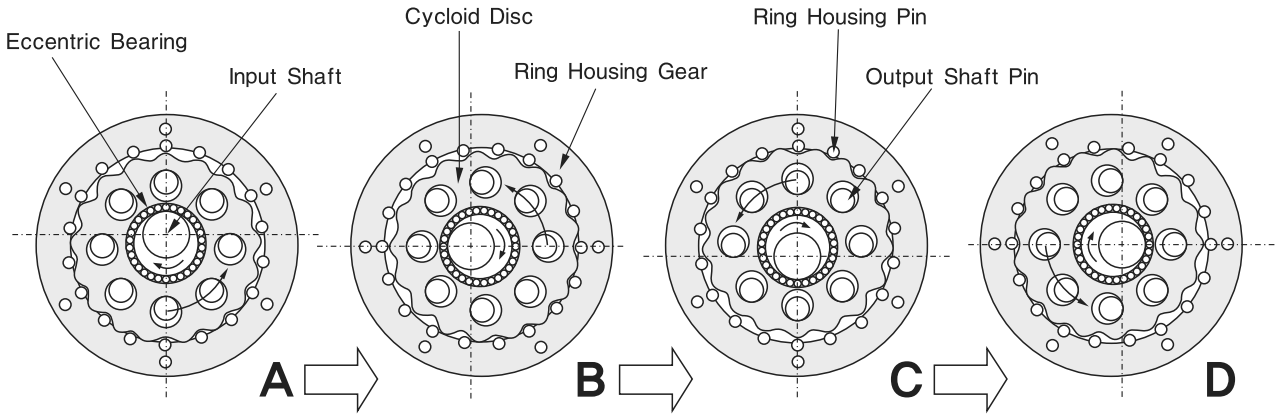

감속원리는 입력축에 전달된 토오크는 편심캠의 운동으로 회전하고 그 운동으로 링기어 하우징의 내부 곡선판을 회전 시킨다. 링기어 하우징에 고정되어 있는 핀과 접촉하는 곡선판의 회전으로 출력축이 반대 방향으로 회전하게 됩니다. 편심캠 1회전시 곡선판 1개 잇수만큼 이동하게 되고, 곡선판 내부 홀에 삽입되어 있는 출력축 고정핀에 의하여 출력축이 회전하면서 감속된 회전수를 얻을 수 있다.

(Torque transmitted to the high-speed shaft rotates the eccentric cam and roller bearing assembly, and rolls the cycloid discs around the internal circumference of the stationary ring gear housing. The teeth of the cycloid discs contact the pins of the stationary ring gear, producing a reverse rotation at a reduced speed.
Each rotation of the high-speed shaft advances the cycloid discs a distance of one tooth pitch in the opposite direction. The reduced rotation of cycloid discs is transmitted to the output shaft assembly by means of drive pins and rollers that are projected through holes located around the bore of the cycloid discs.)

성능 및 선정표(4P)1단 (Selection & Performance table - Single Reduction - 4P)

Ratio	Motor		50 Hz			60 Hz			Model	Dimension Dwg (Page)	
	CAP (KW)	Sym	Output Speed rpm	Output Torque Kgf.m	SF	Output Speed rpm	Output Torque Kgf.m	SF	CAP-Frame-Ratio	H	V
6	0.2	02	250	0.76	2.0	300	0.63	2.0	02-8808-6	44	54
	0.4	05		1.5	1.95		1.25	1.95	05-8808-6	44	54
	0.75	1		2.85	2.0		2.35	2.0	1-8809-6	44	54
	1.5	2		5.7	2.1		4.7	2.1	2-8810-6	44	54
	2.2	3		8.4	1.4		6.9	1.4	3-8810-6	44	54
					1.7			1.7	3-8811-6	44	54
	3.7	5		14.2	1.0		11.7	1.0	5-8811-6	44	54
					1.8			1.5	5-8812-6	44	54
	5.5	8		21.0	1.2		17.0	1.0	8-8812-6	44	54
					2.0			2.0	8-8813-6	44	54
	7.5	10		28.5	1.5		23.5	1.5	10-8813-6	44	54
					2.0			2.0	10-8814-6	44	54
	11	15		42.0	1.0		34.7	1.0	15-8813-6	44	54
					1.3			1.3	15-8814-6	44	54
					1.8			1.8	15-8816-6	44	54
	15	20		57.2	1.6		47.3	1.6	20-8816-6	44	54
	18.5	25		70.0	1.6		58.2	1.6	25-8817-6	44	54
8	0.2	02	188	1.0	2.0	225	0.8	2.0	02-8808-8	44	54
	0.4	05		2.0	1.95		1.65	1.95	05-8808-8	44	54
	0.75	1		3.8	2.0		3.1	2.0	1-8809-8	44	54
	1.5	2		7.6	2.1		6.3	2.1	2-8810-8	44	54
	2.2	3		11.0	1.4		9.3	1.4	3-8810-8	44	54
					1.7			1.7	3-8811-8	44	54
	3.7	5		18.5	1.0		15.3	1.0	5-8811-8	44	54
					1.8			1.8	5-8812-8	44	54
	5.5	8		28.0	1.24		23.0	1.23	8-8812-8	44	54
					2.0			2.0	8-8813-8	44	54
	7.5	10		38.0	1.5		31.5	1.5	10-8813-8	44	54
					2.0			2.0	10-8814-8	44	54
	11	15		56.0	1.37		46.2	1.37	15-8814-8	44	54
					1.79			1.79	15-8816-8	44	54
	15	20		76.5	1.6		63.0	1.6	20-8816-8	44	54

성능 및 선정표(4P)1단 (Selection & Performance table - Single Reduction - 4P)

Ratio	Motor		50 Hz			60 Hz			Model	Dimension Dwg (Page)	
	CAP (KW)	Sym	Output Speed rpm	Output Torque Kgf.m	SF	Output Speed rpm	Output Torque Kgf.m	SF	CAP-Frame-Ratio	H	V
11	0.2	02	136	1.4	1.4	164	1.13	1.4	02-8807-11	44	54
					2.0			2.0	02-8808-11	44	54
	0.4	05		2.8	1.9		2.3	1.9	05-8808-11	44	54
					3.05			3.02	05-8809-11	44	54
	0.75	1		5.2	2.0		4.3	2.0	1-8809-11	44	54
					3.62			3.06	1-8810-11	44	54
	1.5	2		10.3	2.1		8.7	2.1	2-8810-11	44	54
					3.35			3.32	2-8811-11	44	54
	2.2	3		15.2	1.4		12.5	1.4	3-8810-11	44	54
					1.7			1.7	3-8811-11	44	54
	3.7	5		26.0	1.0		21.0	1.0	5-8811-11	44	54
					2.5			2.5	5-8813-11	44	54
	5.5	8		38.2	2.0		32.0	2.0	8-8813-11	44	54
	7.5	10		52.3	1.5		43.2	1.5	10-8813-11	44	54
					1.7			1.7	10-8814-11	44	54
	11	15		77.0	1.3		63.5	1.3	15-8814-11	44	54
					1.7			1.7	15-8816-11	44	54
	15	20		105	1.6		87.0	1.6	20-8816-11	44	54
					1.8			1.8	20-8817-11	44	54
	18.5	25		130	1.6		108	1.6	25-8817-11	44	54
					1.9			1.9	25-8818-11	44	56
	22	30		150	1.3		125	1.3	30-8817-11	44	54
					1.7			1.7	30-8818-11	44	56
	30	40		206	1.3		170	1.3	40-8818-11	44	56
					1.6			1.6	40-8819-11	46	56
	37	50		255	1.3		210	1.3	50-8819-11	46	56
					1.6			1.6	50-8820-11	46	56
	45	60		310	1.3		260	1.3	60-8820-11	46	56
					1.6			1.6	60-8821-11	46	56
	55	75		380	1.3		320	1.3	75-8821-11	46	56
					1.8			1.8	75-8822-11	46	56
	75	100		520	1.3		430	1.3	100-8822-11	46	56
13	0.2	02	115	1.63	1.4	138	1.35	1.4	02-8807-13	44	54
					2.0			2.0	02-8808-13	44	54
	0.4	05		3.3	1.9		2.7	1.9	05-8808-13	44	54
					3.0			3.0	05-8809-13	44	54
	0.75	1		6.0	2.0		5.0	2.0	1-8809-13	44	54
					3.54			3.52	1-8810-13	44	54
	1.5	2		12	2.0		10.0	2.0	2-8810-13	44	54
	2.2	3		18	1.4		15.0	1.4	3-8810-13	44	54
					1.7			1.7	3-8811-13	44	54
	3.7	5		30	1.0		25.0	1.0	5-8811-13	44	54
					1.35			1.35	5-8812-13	44	54
	5.5	8		45	2.0		37.5	2.0	8-8813-13	44	54
	7.5	10		62	1.3		51.0	1.3	10-8813-13	44	54
					2.0			2.0	10-8814-13	44	54
	11	15		91	1.7		75.0	1.7	15-8816-13	44	54
	15	20		120	1.5		100	1.5	20-8816-13	44	54
					1.8			1.8	20-8817-13	44	54
	18.5	25		150	1.6		125	1.6	25-8817-13	44	54
					1.9			1.9	25-8818-13	44	54
	22	30		180	1.3		150	1.3	30-8817-13	44	54
					1.7			1.7	30-8818-13	44	56
	30	50		245	1.3		203	1.3	40-8818-13	44	56
					1.6			1.6	40-8819-13	46	56
	37	50		305	1.3		250	1.3	50-8819-13	46	56

성능 및 선정표(4P)1단 (Selection & Performance table - Single Reduction - 4P)

Ratio	Motor		50 Hz			60 Hz			Model	Dimension Dwg (Page)	
	CAP (KW)	Sym	Output Speed rpm	Output Torque Kgf.m	SF	Output Speed rpm	Output Torque Kgf.m	SF	CAP-Frame-Ratio	H	V
15	0.2	02	100	1.9	1.4	120	1.55	1.4	02-8807-15	44	54
					2.0			2.0	02-8808-15	44	54
	0.4	05		3.8	1.9		3.1	1.9	05-8808-15	44	54
					2.62			2.0	05-8809-15	44	54
	0.75	1		7.1	2.0		5.9	2.0	1-8809-15	44	54
					3.65			3.36	1-8810-15	44	54
	1.5	2		14.0	2.1		11.5	2.1	2-8810-15	44	54
					3.23			3.21	2-8811-15	44	54
	2.2	3		20.5	1.4		17.0	1.4	3-8810-15	44	54
					1.7			1.7	3-8811-15	44	54
	3.7	5		35.0	1.0		29.0	1.0	5-8811-15	44	54
					1.6			1.6	5-8812-15	44	54
					2.1			2.1	5-8813-15	44	54
	5.5	8		52.0	1.6		43.0	1.6	8-8813-15	44	54
					2.1			2.1	8-8814-15	44	54
	7.5	10		71.0	1.2		59.0	1.2	10-8813-15	44	54
					1.6			1.6	10-8814-15	44	54
	11	15		105	1.7		87.0	1.7	15-8816-15	44	54
					2.5			2.5	20-8817-15	44	54
	15	20		140	1.5		115	1.5	20-8816-15	44	54
					2.0			2.0	20-8817-15	44	54
	18.5	25		175	1.6		145	1.6	25-8817-15	44	54
					1.75			1.75	25-8818-15	44	56
	22	30		205	1.3		170	1.3	30-8817-15	44	54
					1.7			1.7	30-8818-15	44	56
	30	40		285	1.3		235	1.3	40-8818-15	44	56
					1.6			1.6	40-8819-15	44	56
	37	50		350	1.3		290	1.3	50-8819-15	46	56
					1.6			1.6	50-8820-15	46	56
	45	60		430	1.3		355	1.3	60-8820-15	46	56
					1.6			1.6	60-8821-15	46	56
	55	75		520	1.3		430	1.3	75-8821-15	46	56
					1.8			1.8	75-8822-15	46	56
	75	100		715	1.3		590	1.3	100-8822-15	46	56

성능 및 선정표(4P)1단 (Selection & Performance table - Single Reduction - 4P)

Ratio	Motor		50 Hz			60 Hz			Model	Dimension Dwg (Page)	
	CAP (KW)	Sym	Output Speed rpm	Output Torque Kgf.m	SF	Output Speed rpm	Output Torque Kgf.m	SF	CAP-Frame-Ratio	H	V
17	0.2	02	88	2.15	1.4	106	1.8	1.4	02-8807-17	44	54
					2.0			2.0	02-8808-17	44	54
	0.4	05		4.3	1.9		3.55	1.9	05-8808-17	44	54
					2.68			2.72	05-8809-17	44	54
	0.75	1		8.1	2.0		6.7	2.0	1-8809-17	44	54
					2.79			2.73	1-8810-17	44	54
	1.5	2		16.0	1.6		13.2	1.6	2-8810-17	44	54
					2.1			2.1	2-8811-17	44	54
	2.2	3		23.5	1.7		19.5	1.7	3-8811-17	44	54
	3.7	5		40.0	1.0		33.0	1.0	5-8811-17	44	54
					1.5			1.5	5-8812-17	44	54
					1.9			1.91	5-8813-17	44	54
	5.5	8		59.0	1.5		49.0	1.5	8-8813-17	44	54
					1.8			1.8	8-8814-17	44	54
	7.5	10		81.0	1.6		67.0	1.6	10-8814-17	44	54
					1.7			1.7	10-8816-17	44	54
	11	15		115	1.7		98.0	1.7	15-8816-17	44	54
					1.8			1.8	15-8817-17	44	54
	15	20		160	1.2		132	1.2	20-8816-17	44	54
					1.6			1.6	20-8817-17	44	54
	18.5	25		200	1.3		165	1.3	25-8817-17	44	54
					2.1			2.1	25-8818-17	44	56
	22	30		235	1.7		195	1.7	30-8818-17	44	56
					1.85			1.85	30-8819-17	46	56
	30	40		320	1.3		265	1.3	40-8818-17	46	56
					1.6			1.6	40-8819-17	46	56
	37	50		400	1.3		330	1.3	50-8819-17	46	56
21	0.2	02	71	2.6	1.1	86	2.2	1.1	02-8807-21	44	54
					2.4			2.4	02-8808-21	44	54
	0.4	05		5.3	1.3		4.4	1.3	05-8808-21	44	54
					1.9			1.9	05-8809-21	44	54
	0.75	1		10.0	2.0		8.3	2.0	1-8809-21	44	54
					2.69			2.68	1-8810-21	44	54
	1.5	2		20.0	1.5		16.5	1.5	2-8810-21	44	54
					1.8			1.8	2-8811-21	44	54
	2.2	3		29.0	1.8		24.0	1.8	3-8811-21	44	54
	3.7	5		49.0	1.0		41.0	1.0	5-8811-21	44	54
					2.0			2.0	5-8813-21	44	54
	5.5	8		73.0	1.3		60.0	1.3	8-8813-21	44	54
					2.0			2.0	8-8814-21	44	54
	7.5	10		100	2.0		83.0	2.0	10-8816-21	44	54
	11	15		145	1.4		120	1.4	15-8816-21	44	54
					2.1			2.1	15-8817-21	44	54
	15	20		200	1.6		165	1.6	20-8817-21	44	54
					2			2.0	20-8818-21	44	56
	18.5	25		245	1.3		200	1.3	25-8817-21	44	54
					2.0			2.0	25-8818-21	44	56
	22	30		290	1.7		240	1.7	30-8818-21	44	56
					1.85			1.85	30-8819-21	46	56
	30	40		400	1.6		330	1.6	40-8819-21	46	56
					1.9			1.9	40-8820-21	46	56
	37	50		490	1.3		410	1.3	50-8819-21	46	56
					1.6			1.6	50-8820-21	46	56
					2.0			2.0	50-8821-21	46	56
	45	60		600	1.3		490	1.3	60-8820-21	46	56
					1.6			1.6	60-8821-21	46	56
	55	75		730	1.3		605	1.3	75-8821-21	46	56
					1.7			1.7	75-8822-21	46	56

성능 및 선정표(4P)1단 (Selection & Performance table - Single Reduction - 4P)

Ratio	Motor		50 Hz			60 Hz			Model	Dimension Dwg (Page)	
	CAP (KW)	Sym	Output Speed rpm	Output Torque Kgf.m	SF	Output Speed rpm	Output Torque Kgf.m	SF	CAP-Frame-Ratio	H	V
25	0.2	02	60	3.1	1.4	72	2.6	1.4	02-8808-25	44	54
					3.75			3.75	02-8809-25	44	54
	0.4	05		6.3	2.1		5.2	2.1	05-8809-25	44	54
	0.75	1		11.8	1.1		9.8	1.1	1-8809-25	44	54
					2.2			2.2	1-8810-25	44	54
	1.5	2		23.5	1.4		19.5	1.4	2-8811-25	44	54
	2.2	3		35.0	1.0		29.0	1.0	3-8811-25	44	54
					1.8			1.8	3-8812-25	44	54
					2.3			2.3	3-8813-25	44	54
	3.7	5		58.5	1.6		48.5	1.6	5-8813-25	44	54
					1.8			1.8	5-8814-25	44	54
	5.5	8		87.0	1.06		72.0	1.06	8-8814-25	44	54
					1.4			1.4	8-8815-25	44	54
					1.8			1.8	8-8816-25	44	54
	7.5	10		118	2.0		99.0	2.0	10-8816-25	44	54
					2.5			2.5	10-8817-25	44	54
	11	15		172	1.3		142	1.3	15-8816-25	44	54
					1.7			1.7	15-8817-25	44	54
					2.07			2.07	15-8818-25	44	56
	15	20		235	1.3		195	1.3	20-8817-25	44	54
					2.0			2.0	20-8818-25	44	56
	18.5	25		290	1.6		240	1.6	25-8818-25	44	56
					1.9			1.9	25-8819-25	46	56
	22	30		350	1.3		290	1.3	30-8818-25	44	56
					1.8			1.8	30-8819-25	46	56
	30	40		475	1.3		395	1.3	40-8819-25	46	56
29	0.2	02	52	3.7	1.4	62	3.0	1.4	02-8808-29	44	54
					3.35			3.4	02-8809-29	44	54
	0.4	05		7.2	1.9		6.0	1.9	05-8809-29	44	54
	0.75	1		13.5	2.0		11.0	2.0	1-8810-29	44	54
	1.5	2		27.5	1.4		22.5	1.4	2-8811-29	44	54
	2.2	3		40.0	1.0		33.5	1.0	3-8811-29	44	54
					2.0			2.0	3-8813-29	44	54
	3.7	5		68.0	1.2		56.0	1.2	5-8813-29	44	54
					1.6			1.6	5-8814-29	44	54
	5.5	8		100	1.3		84.0	1.3	8-8815-29	44	54
					2.0			2.0	8-8816-29	44	54
	7.5	10		136	1.5		112	1.5	10-8816-29	44	54
					1.91			1.91	10-8817-29	44	54
	11	15		200	1.7		167	1.7	15-8817-29	44	54
					1.75			1.75	15-8818-29	44	56
	15	20		275	1.6		225	1.6	20-8818-29	44	56
					2.01			2.0	20-8819-29	44	56
	18.5	25		340	1.3		280	1.3	25-8818-29	44	56
					2.0			2.0	25-8819-29	46	56
	22	30		405	1.7		335	1.7	30-8819-29	46	56
					2.0			2.0	30-8820-29	46	56
	30	40		550	1.2		455	1.2	40-8819-29	46	56
					1.5			1.5	40-8820-29	46	56
					1.9			1.9	40-8821-29	46	56
	37	50		680	1.0		565	1.0	50-8819-29	46	56
					1.5			1.5	50-8821-29	46	56
	45	60		830	1.3		685	1.3	60-8821-29	46	56
					1.6			1.6	60-8822-29	46	56
	55	75		1015	1.3		840	1.3	75-8822-29	46	56

성능 및 선정표(4P)1단 (Selection & Performance table - Single Reduction - 4P)

Ratio	Motor		50 Hz			60 Hz			Model	Dimension Dwg (Page)	
	CAP (KW)	Sym	Output Speed rpm	Output Torque Kgf.m	SF	Output Speed rpm	Output Torque Kgf.m	SF	CAP-Frame-Ratio	H	V
35	0.2	02	43	4.4	1.4	51	3.7	1.4	02-8808-35	44	54
					2.9			2.9	02-8809-35	44	54
	0.4	05		8.9	1.9		7.3	1.9	05-8809-35	44	54
					2.55			2.58	05-8810-35	44	54
	0.75	1		16.5	1.6		13.5	1.6	1-8810-35	44	54
					2.0			2.0	1-8811-35	44	54
	1.5	2		33.0	1.2		27.5	1.2	2-8811-35	44	54
					2.1			2.1	2-8812-35	44	54
	2.2	3		49.0	1.0		40.5	1.0	3-8811-35	44	54
					1.9			1.9	3-8813-35	44	54
	3.7	5		82.0	1.0		68.0	1.0	5-8813-35	44	54
					1.4			1.4	5-8814-35	44	54
					2.0			2.0	5-8815-35	44	54
	5.5	8		120	2.0		100	2.0	8-8816-35	44	54
					2.1			2.1	8-8817-35	44	54
	7.5	10		165	1.5		137	1.5	10-8816-35	44	54
					2.0			2.0	10-8817-35	44	54
	11	15		242	1.3		201	1.3	15-8817-35	44	54
					2.0			2.0	15-8818-35	44	56
	15	20		332	1.5		275	1.5	20-8818-35	44	56
					2.0			2.0	20-8819-35	46	56
	18.5	25		410	1.2		340	1.2	25-8818-35	44	56
					1.6			1.6	25-8819-35	46	56
	22	30		490	1.3		405	1.3	30-8819-35	46	56
43	0.2	02	35	5.4	1.1	42	4.5	1.1	02-8808-43	44	54
					2.5			2.45	02-8809-43	44	54
	0.4	05		11.0	1.5		9.0	1.5	05-8809-43	44	54
					1.95			1.95	05-8810-43	44	54
	0.75	1		20.5	1.4		16.8	1.4	1-8810-43	44	54
					2.0			2.0	1-8811-43	44	54
	1.5	2		41.0	1.0		34.0	1.0	2-8811-43	44	54
					1.97			1.97	2-8813-43	44	54
	2.2	3		60.0	1.7		49.0	1.7	3-8813-43	44	54
					1.8			1.8	3-8814-43	44	54
	3.7	5		100	1.4		84.0	1.4	5-8814-43	44	54
					2.1			2.1	5-8816-43	44	54
	5.5	8		150	1.4		124	1.4	8-8816-43	44	54
					2.0			2.0	8-8817-43	44	54
	7.5	10		205	1.5		168	1.5	10-8817-43	44	54
					2.0			2.0	10-8818-43	44	56
	11	15		300	1.7		248	1.7	15-8818-43	44	56
					1.9			1.9	15-8819-43	46	56
	15	20		410	1.2		340	1.2	20-8818-43	44	56
					2.0			2.0	20-8819-43	46	56
	18.5	25		505	1.6		418	1.6	25-8819-43	46	56
					1.7			1.7	25-8820-43	46	56
	22	30		600	1.4		498	1.4	30-8820-43	46	56
					2.0			2.0	30-8821-43	46	56
	30	40		820	1.5		680	1.5	40-8821-43	46	56
					1.8			1.8	40-8822-43	46	56
	37	50		1006	1.2		840	1.2	50-8821-43	46	56
					1.5			1.5	50-8822-43	46	56
	45	60		1225	1.0		1015	1.0	60-8821-43	46	56

성능 및 선정표(4P)1단 (Selection & Performance table - Single Reduction - 4P)

Ratio	Motor		50 Hz			60 Hz			Model	Dimension Dwg (Page)	
	CAP (KW)	Sym	Output Speed rpm	Output Torque Kgf.m	SF	Output Speed rpm	Output Torque Kgf.m	SF	CAP-Frame-Ratio	H	V
51	0.2	02	29	6.5	1.6	35	5.3	1.6	02-8809-51	44	54
	0.4	05		12.8	1.9		10.7	1.9	05-8810-51	44	54
	0.75	1		24.2	1.4		20.0	1.4	1-8811-51	44	54
	1.5	2		48.5	1.5		40.2	1.5	2-8812-51	44	54
					1.9			1.9	2-8813-51	44	54
	2.2	3		71.0	1.3		59.0	1.3	3-8813-51	44	54
					1.5			1.5	3-8814-51	44	54
					1.9			1.9	3-8815-51	44	54
					2.59			2.58	3-8816-51	44	54
	3.7	5		118	2.0		99.0	2.0	5-8816-51	44	54
					2.25			2.86	5-8817-51	44	54
	5.5	7.5		176	1.3		146	1.3	8-8816-51	44	54
					2.0			2.0	8-8817-51	44	54
	7.5	10		242	1.5		200	1.5	10-8817-51	44	54
					2.0			2.0	10-8818-51	44	56
	11	15		355	1.3		293	1.3	15-8818-51	44	56
					1.9			1.9	15-8819-51	46	56
	15	20		485	1.3		402	1.3	20-8819-51	46	56
59	0.2	02	25	7.5	1.8	31	6.2	1.8	02-8809-59	44	54
	0.4	04		15.0	1.7		12.3	1.7	05-8810-59	44	54
					2.1			2.1	05-8811-59	44	54
	0.75	1		28.0	1.3		23.2	1.3	1-8811-59	44	54
	1.5	2		56.0	1.6		46.5	1.6	2-8813-59	44	54
					1.9			1.9	2-8814-59	44	54
	2.2	3		82.0	1.1		68.5	1.1	3-8813-59	44	54
					1.6			1.6	3-8814-59	44	54
					2.0			2.0	3-8816-59	44	54
	3.7	5		137	1.5		113	1.5	5-8816-59	44	54
					1.9			1.9	5-8817-59	44	54
	5.5	8		205	1.5		170	1.5	8-8817-59	44	54
					1.75			1.75	8-8818-59	44	56
	7.5	10		280	1.31		232	1.3	10-8818-59	44	56
					2.07			2.07	10-8819-59	46	56
	11	15		412	1.7		342	1.7	15-8819-59	46	56
					2.0			2.0	15-8820-59	46	56
	15	20		560	1.3		700	1.3	20-8820-59	46	56
					1.8			1.8	20-8821-59	46	56
	18.5	25		692	1.5		575	1.5	25-8820-59	46	56
					1.9			1.98	25-8821-59	46	56
	22	30		826	1.7		684	1.7	30-8821-59	46	56
					2.0			2.0	30-8822-59	46	56
	30	40		1125	1.5		930	1.5	40-8822-59	46	56

성능 및 선정표(4P)1단 (Selection & Performance table - Single Reduction - 4P)

Ratio	Motor		50 Hz			60 Hz			Model	Dimension Dwg (Page)	
	CAP (KW)	Sym	Output Speed rpm	Output Torque Kgf.m	SF	Output Speed rpm	Output Torque Kgf.m	SF	CAP-Frame-Ratio	H	V
71	0.2	02	21	9.0	1.5	25	7.5	1.5	02-8809-71	44	54
					2.45			2.45	02-8810-71	44	54
	0.4	05		18.0	1.4		15.0	1.4	05-8810-71	44	54
					1.9			1.9	05-8811-71	44	54
	0.75	1		34.0	1.0		28.0	1.0	1-8811-71	44	54
					1.6			1.6	1-8812-71	44	54
					2.4			2.43	1-8813-71	44	54
	1.5	2		67.5	1.4		56.1	1.4	2-8813-71	44	54
					1.6			1.6	2-8814-71	44	54
	2.2	3		99.3	1.3		82.2	1.3	3-8815-71	44	54
					2.5			2.5	3-8816-71	44	54
	3.7	5		165	1.5		137	1.5	5-8816-71	44	54
					1.9			1.9	5-8817-71	44	54
	5.5	8		246	1.3		203	1.3	8-8817-71	44	54
					1.7			1.7	8-8818-71	44	56
	7.5	10		337	1.3		278	1.3	10-8818-71	44	56
					1.79			1.79	10-8819-71	46	56
	11	15		495	1.4		410	1.4	15-8819-71	46	56
87	0.2	02	17	11.0	1.5	21	9.0	1.5	02-8809-87	44	54
					2.45			2.45	02-8810-87	44	54
	0.4	05		22.0	1.6		18.2	1.6	05-8810-87	44	54
					1.9			1.9	05-8811-87	44	54
	0.75	1		41.3	1.0		34.2	1.0	1-8811-87	44	54
					1.9			1.9	1-8813-87	44	54
	1.5	2		83.0	1.3		68.7	1.31	2-8813-87	44	54
					1.6			1.6	2-8814-87	44	54
					2.23			2.23	2-8816-87	44	54
	2.2	3		120	1.7		99.8	1.7	3-8816-87	44	54
					2.2			2.2	3-8817-87	44	54
	3.7	5		203	1.5		168	1.5	5-8817-87	44	54
					1.9			1.9	5-8818-87	44	56
	5.5	8		302	1.5		251	1.5	8-8818-87	44	56
					2.13			2.13	8-8819-87	46	56
	7.5	10		413	1.1		343	1.1	10-8818-87	46	56
					1.8			1.8	10-8819-87	46	56
	11	15		607	1.2		503	1.2	15-8819-87	46	56
					1.4			1.4	15-8820-87	46	56
					1.9			1.9	15-8821-87	46	56
	15	23		830	1.4		687	1.4	20-8821-87	46	56
					1.7			1.7	20-8822-87	46	56
	18.5	25		1025	1.4		846	1.4	25-8822-87	46	56
119	0.2	02	13	14.6	1.25	15	12.2	1.2	02-8810-119	44	54

성능 및 선정표(4P)2단 (Selection & Performance table - Double Reduction - 4P)

Ratio	Motor		50 Hz			60 Hz			Model	Dimension Dwg (Page)	
	CAP (KW)	Sym	Output Speed rpm	Output Torque Kgf.m	SF	Output Speed rpm	Output Torque Kgf.m	SF	CAP-Frame-Ratio	H	V
104 (13x8)	0.2	02	14	12.5	1.9	17	10.3	1.9	02-8809/08-104	48	60
					2.1			2.1	02-8810/08-104	48	60
	0.4	05		25.0	1.0		20.6	1.06	05-8810/08-104	48	60
					1.6			1.6	05-8811/08-104	48	60
					2.1			2.42	05-8812/09-104	48	60
	0.75	1		47.0	1.6		39.0	1.6	1-8812/09-104	48	60
					1.8			2.16	1-8813/10-104	48	60
	1.5	2		94.2	1.0		78.0	1.08	2-8813/10-104	48	60
					1.9			2.2	2-8816/10-104	48	60
	2.2	3		136	1.2		113	1.2	3-8814/10-104	48	60
					1.8			1.8	3-8816/10-104	48	60
					2.2			2.2	3-8817/11-104	48	60
	3.7	5		230	1.5		190	1.1	5-8816/11-104	48	60
					1.6			1.6	5-8817/11-104	50	60
	5.5	8		343	1.1		283	1.1	8-8817/11-104	50	60
					1.7			1.7	8-8818/13-104	50	62
	7.5	10		470	1.2		390	1.2	10-8818/13-104	50	62
					1.5			1.5	10-8819/13-104	50	62
121 (11x11)	0.2	02	12	14.3	1.3	15	12.0	1.3	02-8809/08-121	48	60
					2.1			2.1	02-8810/08-121	48	60
	0.4	05		29.0	1.0		24.0	1.0	05-8810/08-121	48	60
					1.6			1.6	05-8811/08-121	48	60
					2.2			2.2	05-8812/09-121	48	60
	0.75	1		54.5	1.4		45.3	1.4	1-8812/09-121	48	60
					2.1			2.1	1-8813/09-121	48	60
	1.5	2		109	1.0		90.5	1.0	2-8813/10-121	48	60
					1.1			1.1	2-8814/10-121	48	60
					2.2			2.2	2-8816/10-121	48	60
	2.2	3		160	1.0		130	1.0	3-8814/10-121	48	60
					1.3			1.5	3-8816/11-121	48	60
					2.4			2.4	3-8817/11-121	50	60
	3.7	5		270	1.0		220	1.0	5-8816/11-121	50	60
					1.4			1.4	5-8817/11-121	50	60
					2.1			2.1	5-8818/13-121	50	62
	5.5	8		400	1.0		330	1.0	8-8817/11-121	50	62
					1.4			1.4	8-8818/13-121	50	62
					2.1			2.1	8-8819/13-121	50	62
	7.5	10		545	1.4		453	1.5	10-8819/13-121	50	62
					1.7			1.8	10-8820/13-121	50	62
					2.2			2.5	10-8821/16-121	50	62
	11	15		802	1.4		663	1.7	15-8821/16-121	50	62
					1.7			2.0	15-8822/17-121	52	64
	15	20		1100	1.2		906	1.3	20-8822/17-121	52	64
					1.5			1.6	20-8823/16-121	52	64
					1.9			2.3	20-8824/18-121	52	64
	18.5	25		1340	1.1		1115	1.2	25-8822/17-121	52	64
					1.3			1.3	25-8823/18-121	52	64
					1.5			1.6	25-8824/18-121	52	64
					2.1			2.2	28-8825/19-121	52	64
	22	30		1600	1.1		1320	1.1	30-8823/18-121	52	64
					1.5			1.5	30-8824/18-121	52	64
					1.9			2.1	30-8825/19-121	52	64
	30	40		2180	1.0		1810	1.10	40-8825/19-121	52	64
					1.4			1.6	40-8826/19-121	52	64
	37	50		2700	1.0		2230	1.2	50-8825/19-121	52	64

성능 및 선정표(4P)2단 (Selection & Performance table - Double Reduction - 4P)

Ratio	Motor		50 Hz			60 Hz			Model	Dimension Dwg (Page)	
	CAP (KW)	Sym	Output Speed rpm	Output Torque Kgf.m	SF	Output Speed rpm	Output Torque Kgf.m	SF	CAP-Frame-Ratio	H	V
143 (13x11)	0.2	02	10	17.2	1.0	13	14.2	1.05	02-8809/08-143	48	60
					1.4			1.4	02-8810/08-143	48	60
	0.4	05		34.3	1.0		28.3	1.0	05-8811/08-143	48	60
					1.8			2.2	05-8812/09-143	48	60
	0.75	1		64.5	1.2		53.5	1.2	1-8811/09-143	48	60
					1.7			1.7	1-8813/09-143	48	60
	1.5	2		128	1.0		105	1.0	2-8813/10-143	48	60
					1.0			1.04	2-8814/10-143	48	60
					1.56			1.84	2-8816/10-143	48	60
	2.2	3		188	1.06		156	1.25	3-8816/10-143	48	60
					1.06			1.27	3-8816/11-143	48	60
					1.62			1.92	3-8817/11-143	50	60
	3.7	5		317	1.0		263	1.0	5-8816/11-143	50	60
					1.0			1.2	5-8817/11-143	50	60
					1.5			1.8	5-8818/13-143	50	62
	5.5	8		473	1.0		392	1.2	8-8818/13-143	50	62
					1.6			1.9	8-8819/13-143	50	62
	7.5	10		645	1.2		535	1.4	10-8819/13-143	50	62
165 (15x11)	0.2	02	9.1	19.6	1.0	11	16.3	1.2	02-8809/08-165	48	60
					1.5			1.8	02-8810/08-165	48	60
	0.4	05		39.5	1.0		32.5	1.0	05-8810/08-165	48	60
					1.0			1.0	05-8811/08-165	48	60
					1.7			1.9	05-8812/09-165	48	60
	0.75	1		74.5	1.0		61.5	1.0	1-8811/09-165	48	60
					1.2			1.5	1-8813/09-165	48	60
					1.6			2.0	1-8814/09-165	48	60
	1.5	2		148	1.0		122	1.0	2-8813/10-165	48	60
					1.0			1.0	2-8814/10-165	48	60
					1.35			1.61	2-8816/10-165	48	60
	2.2	3		218	1.0		180	1.10	3-8816/10-165	48	60
					1.4			1.5	3-8817/10-165	48	60
					1.9			2.2	3-8818/11-165	50	60
	3.7	5		360	1.0		303	1.0	5-8817/11-165	50	60
					1.3			1.6	5-8818/13-165	50	62
					1.8			2.1	5-8819/13-165	50	62
	5.5	8		545	1.0		453	1.0	8-8818/13-165	50	62
					1.5			1.7	8-8819/13-165	50	62
	7.5	10		745	1.1		615	1.3	10-8819/13-165	50	62
					1.4			1.5	10-8820/13-165	50	62
					1.7			2.0	10-8821/13-165	50	62
	11	15		1090	1.0		905	1.03	15-8821/16-165	50	62
					1.3			1.6	15-8822/17-165	50	64
					1.8			2.2	15-8823/16-165	52	64
	15	20		1490	1.0		1235	1.0	20-8822/17-165	52	64
					1.4			1.6	20-8823/16-165	52	64
					1.8			2.1	20-8824/16-165	52	64
	18.5	25		1830	1.0		1520	1.3	25-8823/18-165	52	64
					1.3			1.4	25-8824/18-165	52	64
					1.7			2.0	25-8825/19-165	52	64
	22	30		2180	1.0		1810	1.1	30-8823/18-165	52	64
					1.1			1.10	30-8824/18-165	52	64
					1.4			1.7	30-8825/19-165	52	64
					2.0			2.3	30-8826/19-165	52	64
	30	40		2980	1.0		2470	1.2	40-8825/19-165	52	64
					1.4			1.6	40-8826/19-165	52	64
	37	50		3680	1.2		3050	1.3	50-8826/19-165	52	64

성능 및 선정표(4P)2단 (Selection & Performance table - Double Reduction - 4P)

Ratio	Motor		50 Hz			60 Hz			Model	Dimension Dwg (Page)	
	CAP (KW)	Sym	Output Speed rpm	Output Torque Kgf.m	SF	Output Speed rpm	Output Torque Kgf.m	SF	CAP-Frame-Ratio	H	V
195 (15x13)	0.2	02	7.7	23.5	1.20	9.2	19.3	1.45	02-8810/08-195	48	60
					2.00			2.00	02-8811/08-195	48	60
	0.4	05		47	1.0		39	1.0	05-8810/08-195	48	60
					1.00			1.00	05-8811/08-195	48	60
					1.20			1.42	05-8811/09-195	48	60
					1.72			2.18	05-8813/09-195	48	60
	0.75	1		88	1.0		73	1.0	1-8811/09-195	48	60
					1.0			1.3	1-8813/09-195	48	60
					1.5			1.8	1-8814/10-195	48	60
	1.5	2		176	1.0		145	1.0	2-8814/10-195	48	60
					1.1			1.1	2-8816/10-195	48	60
					1.8			2.0	2-8817/10-195	48	60
	2.2	3		257	1.0		213	1.0	3-8816/10-195	48	60
					1.3			1.5	3-8817/10-195	48	60
					1.3			1.5	3-8817/11-195	50	60
					1.9			2.10	3-8818/13-195	50	62
	3.7	5		433	1.0		358	1.0	5-8817/11-195	50	60
					1.1			1.25	5-8818/13-195	50	62
					1.8			2.2	5-8819/11-195	50	62
	5.5	8		645	1.0		535	1.0	8-8818/13-195	50	62
					1.0			1.1	8-8819/13-195	50	62
					1.4			1.7	8-8820/13-195	50	62
					1.9			2.1	8-8821/13-195	50	62
	7.5	10		882	1.0		730	1.0	10-8819/13-195	50	62
					1.0			1.2	10-8820/13-195	50	62
					1.4			1.5	10-8821/13-195	50	62
					1.6			2.0	10-8822/13-195	52	64
	11	15		1290	1.0		1060	1.0	15-8821/16-195	50	62
					1.1			1.3	15-8822/17-195	52	64
					1.5			1.8	15-8823/16-195	52	64
					2.0			2.1	15-8824/16-195	52	64
	15	20		1760	1.0		1450	1.0	20-8822/17-195	52	64
					1.1			1.3	20-8823/16-195	52	64
					1.5			1.5	20-8824/16-195	52	64
					1.8			2.1	25-8825/17-195	52	64
	18.5	25		2170	1.10		1800	1.2	25-8824/18-195	52	64
					1.4			1.7	25-8825/17-195	52	64
					2.0			2.4	30-8826/19-195	52	64
	22	30		2580	1.0		2140	1.0	30-8824/18-195	52	64
					1.4			1.5	30-8825/17-195	52	64
					1.7			2.0	30-8826/19-195	52	64
	30	40		3520	1.2		2920	1.5	40-8826/19-195	52	64

성능 및 선정표(4P)2단 (Selection & Performance table - Double Reduction - 4P)

Ratio	Motor		50 Hz			60 Hz			Model	Dimension Dwg (Page)	
	CAP (KW)	Sym	Output Speed rpm	Output Torque Kgf.m	SF	Output Speed rpm	Output Torque Kgf.m	SF	CAP-Frame-Ratio	H	V
231 (21x11)	0.2	02	6.5	27.6	1.1	7.8	23.0	1.3	02-8810/08-231	48	60
					1.6			1.8	02-8811/08-231	48	60
	0.4	05		55.3	1.01		46.1	1.02	05-8811/08-231	48	60
					1.7			2.0	05-8813/09-231	48	60
	0.75	1		102	1.0		86	1.1	1-8813/09-231	48	60
					1.1			1.4	1-8814/09-231	48	60
					2.0			2.1	1-8816/09-231	48	60
	1.5	2		207	1.0		170	1.0	2-8816/10-231	48	60
					1.5			1.8	2-8817/10-231	48	60
	2.2	3		305	1.00		253	1.20	3-8817/10-231	48	60
					1.6			2.0	3-8818/10-231	50	62
					2.1			2.5	3-8819/13-231	50	62
	3.7	5		513	0.9		425	1.1	5-8818/13-231	50	62
					1.5			1.6	5-8819/11-231	50	62
					1.8			2.2	5-8820/13-231	50	62
	5.5	8		765	1.0		633	1.1	8-8819/13-231	50	62
					1.1			1.26	8-8820/13-231	50	62
					1.6			2.0	8-8821/13-231	50	62
	7.5	10		1048	0.9		865	1.0	10-8820/13-231	50	62
					1.2			1.4	10-8821/13-231	50	62
					1.4			1.5	10-8822/13-231	52	64
	11	15		1535	0.9		1265	1.0	15-8821/16-231	50	62
					1.0			1.08	15-8822/17-231	52	64
					1.2			1.5	15-8823/16-231	52	64
					1.7			2.0	15-8824/16-231	52	64
	15	20		2085	0.9		1725	1.1	20-8823/16-231	52	64
					1.2			1.5	20-8824/16-231	52	64
					1.5			1.8	20-8825/17-231	52	64
	18.5	25		2575	0.9		2135	1.2	25-8824/18-231	52	64
					1.14			1.36	25-8825/17-231	52	64
					1.8			2.1	25-8826/19-231	52	64
	22	30		3065	0.8		2535	1.0	30-8824/18-231	52	64
					1.0			1.2	30-8825/17-231	52	64
					1.5			1.8	30-8826/19-231	52	64
	30	40		4185	0.9		3465	1.0	40-8825/19-231	52	64
					1.2			1.3	40-8826/19-231	52	64
	37	50		5150	1.0		4270	1.1	50-8826/19-231	52	64

성능 및 선정표(4P)2단 (Selection & Performance table - Double Reduction - 4P)

Ratio	Motor		50 Hz			60 Hz			Model	Dimension Dwg (Page)	
	CAP (KW)	Sym	Output Speed rpm	Output Torque Kgf.m	SF	Output Speed rpm	Output Torque Kgf.m	SF	CAP-Frame-Ratio	H	V
273 (21x13)	0.2	02	5.5	32.5	1.0	6.6	27	1.1	02-8810/08-273	48	60
					1.9			2.00	02-8811/08-273	48	60
	0.4	05		65	1.0		54.2	1.00	05-8811/08-273	48	60
					1.4			1.7	05-8813/09-273	48	60
	0.75	1		123	1.0		102	1.0	1-8813/09-273	48	60
					1.2			1.3	1-8814/10-273	48	60
					1.64			1.96	1-8816/10-273	48	60
	1.5	2		245	1.0		203	1.0	2-8816/10-273	48	60
					1.3			1.5	2-8817/10-273	48	60
					2.0			2.1	2-8818/10-273	48	60
	2.2	3		360	1.0		300	1.02	3-8817/10-273	48	60
					1.3			1.5	3-8818/10-273	50	62
					1.9			2.0	3-8819/13-273	50	62
	3.7	5		607	0.8		503	1.0	5-8818/13-273	50	62
					1.3			1.6	5-8819/11-273	50	62
					2.0			2.4	5-8821/13-273	50	62
	5.5	8		903	1.0		750	1.07	8-8819/13-273	50	62
					1.4			1.7	8-8821/13-273	50	62
					1.55			2.0	8-8822/13-273	52	64
	7.5	10		1235	1.0		1025	1.2	10-8821/13-273	52	62
					1.2			1.36	10-8822/17-273	52	64
					1.6			1.8	10-8823/16-273	50	64
	11	15		1805	0.9		1495	1.0	15-8822/17-273	52	64
					1.1			1.2	15-8823/16-273	52	64
					1.5			1.7	15-8824/16-273	52	64
	15	20		2465	1.0		2045	1.2	20-8824/16-273	52	64
					1.4			1.6	20-8825/17-273	52	64
					1.9			2.2	20-8826/19-273	52	64
	18.5	25		3045	1.0		2525	1.2	25-8825/17-273	52	64
					1.5			1.8	25-8826/19-273	52	64
	22	30		3625	0.9		3006	1.0	30-8825/17-273	52	64
					1.3			1.5	30-8826/19-273	52	64
	30	40		4940	0.9		4000	1.1	40-8826/19-273	52	64
319 (29x11)	0.2	02	4.7	38	1.0	5.6	31	1.0	02-8810/08-319	48	60
					1.45			1.75	02-8811/08-319	48	60
	0.4	05		77	1.0		63	1.0	05-8811/08-319	48	60
					1.10			1.32	05-8813/09-319	48	60
					1.6			1.9	05-8814/09-319	48	60
	0.75	1		143	1.0		118	1.0	1-8813/09-319	48	60
					1.0			1.1	1-8814/09-319	48	60
					1.5			1.7	1-8816/09-319	48	60
	1.5	2		286	1.0		238	1.0	2-8817/10-319	48	60
					1.7			2.0	2-8818/10-319	50	62
	2.2	3		422	1.0		348	1.0	3-8817/11-319	50	60
					1.2			1.4	3-8818/10-319	50	62
					1.2			1.4	3-8818/13-319	50	62
					1.9			2.2	3-8819/11-319	50	62
	3.7	5		710	0.9		589	1.0	5-8818/13-319	50	62
					1.1			1.3	5-8819/13-319	50	62
					1.8			2.1	5-8821/13-319	50	62
	5.5	8		1055	0.9		875	1.0	8-8819/13-319	50	62
					1.2			1.4	8-8821/13-319	50	62
					1.5			1.7	8-8822/13-319	52	64
	7.5	10		1446	0.9		1200	1.0	10-8821/13-319	50	64
					1.1			1.2	10-8822/13-319	52	64
					1.4			1.6	10-8823/16-319	52	62
	11	15		2115	0.9		1755	1.1	15-8823/16-319	52	62
					1.2			1.5	15-8824/16-319	52	62
					1.5			1.8	15-8825/17-319	52	62
	15	20		2885	0.9		2395	1.1	20-8824/16-319	52	62
					1.1			1.3	20-8825/17-319	52	62
					1.6			1.9	20-8826/19-319	52	62
	18.5	25		3565	0.9		2945	1.1	25-8825/17-319	52	62
					1.3			1.5	25-8826/19-319	52	62
					1.9			2.2	25-8827/19-319	52	62
	22	30		4235	1.1		3505	1.3	30-8826/19-319	52	62
					1.6			1.9	30-8827/19-319	52	62
	30	40		5770	1.2		4780	1.4	40-8827/19-319	52	62
	37	50		7120	1.0		5900	1.1	50-8827/19-319	52	62

성능 및 선정표(4P)2단 (Selection & Performance table - Double Reduction - 4P)

Ratio	Motor		50 Hz			60 Hz			Model	Dimension Dwg (Page)	
	CAP (KW)	Sym	Output Speed rpm	Output Torque Kgf.m	SF	Output Speed rpm	Output Torque Kgf.m	SF	CAP-Frame-Ratio	H	V
377 (29x13)	0.2	02	4	45	1.0	4.8	37	1.0	02-8810/08-377	48	58
					1.25			1.50	02-8811/08 -377	48	58
	0.4	05		91	1.05		75	1.1	05-8813/09-377	48	58
					1.45			1.8	05-8814/09-377	48	58
	0.75	1		171	0.8		142	0.9	1-8814/09-377	48	58
					1.2			1.5	1-8816/09-377	48	58
					1.8			2.1	1-8817/10 -377	48	58
	1.5	2		340	0.8		280	0.9	2-8816/10 -377	48	58
					0.9			1.08	2-8817/10 -377	48	58
					1.45			1.8	2-8818/10 -377	50	60
	2.2	3		500	1.0		410	1.2	3-8818/10 -377	50	60
					1.61			1.93	3-8819/13 -377	50	60
	3.7	5		840	1.0		695	1.15	5-8819/13 -377	50	60
					1.5			1.8	5-8821/13 -377	50	60
	5.5	8		1240	1.0		1030	1.2	8-8821/13 -377	50	60
					1.12			1.32	8-8822/17 -377	52	62
					1.5			1.8	8-8823/16 -377	52	62
	7.5	10		1700	0.9		1410	1.0	10 -8822/17 -377	52	62
					1.1			1.3	10 -8823/16 -377	52	62
					1.5			1.8	10 -8824/16 -377	52	62
	11	15		2500	1.0		2070	1.0	15 -8823/16 -377	52	62
					1.0			1.2	15 -8824/16 -377	52	62
					1.3			1.5	15 -8825/17 -377	52	62
					1.8			2.2	15 -8826/19 -377	52	62
	15	20		3410	1.0		2820	1.1	20-8825/17 -377	52	62
					1.3			1.6	20-8826/19 -377	52	62
					2.0			2.4	20-8827/19 -377	52	62
	18.5	25		4200	1.1		3480	1.3	25-8826/19 -377	52	62
					1.6			1.9	25-8827/19 -377	52	62
	22	30		5000	1.0		4140	1.1	30-8826/19 -377	52	62
					1.35			1.6	30-8827/19 -377	52	62
	30	40		6820	1.0		5650	1.2	40-8827/19 -377	52	62

성능 및 선정표(4P)2단 (Selection & Performance table - Double Reduction - 4P)

Ratio	Motor		50 Hz			60 Hz			Model	Dimension Dwg (Page)	
	CAP (KW)	Sym	Output Speed rpm	Output Torque Kgf.m	SF	Output Speed rpm	Output Torque Kgf.m	SF	CAP-Frame-Ratio	H	V
473 (43x11)	0.2	02	3.2	57	1.00	3.8	47	1.20	02-8811/08 -473	48	60
					1.6			2.0	02-8813/08 -473	48	60
	0.4	05		113	0.9		94	1.0	05-8813/08 -473	48	60
					1.0			1.0	05-8814/09 -473	48	60
					1.8			2.12	05-8816/09 -473	48	60
	0.75	1		214	1.0		176	1.0	1-8814/09 -473	48	60
					1.0			1.2	1-8816/09 -473	48	60
					1.5			1.8	1-8817/09 -473	48	60
	1.5	2		427	1.0		353	1.0	2-8817/10 -473	48	60
					1.1			1.4	2-8818/10 -473	50	62
					1.8			2.2	2-8819/11 -473	50	62
	2.2	3		625	0.8		520	1.0	3-8818/10 -473	50	62
					1.2			1.5	3-8819/11 -473	50	62
					1.5			1.8	3-8820/13 -473	50	62
	3.7	5		1050	0.8		875	0.9	5-8820/13 -473	50	62
					1.2			1.4	5-8821/13 -473	50	62
					1.50			1.8	5-8822/13 -473	52	64
	5.5	8		1560	0.8		1300	1.0	8-8821/13 -473	50	62
					1.0			1.20	8-8822/13 -473	52	64
					1.3			1.6	8-8823/16 -473	52	64
	7.5	10		2130	1.0		1770	1.1	10 -8823/16 -473	52	64
					1.2			1.4	10 -8824/16 -473	52	64
					1.5			1.9	10 -8825/17 -473	52	64
	11	15		3130	0.8		2600	1.0	15 -8824/16 -473	52	64
					1.1			1.3	15 -8825/17 -473	52	64
					1.4			1.8	15 -8826/19 -473	52	64
	15	20		4280	0.8		3540	1.0	20-8825/17 -473	52	64
					1.07			1.3	20-8826/19 -473	52	64
					1.6			1.9	20-8827/19 -473	52	64
	18.5	25		5250	0.9		4350	1.00	25-8826/19 -473	52	64
					1.3			1.5	25-8827/19 -473	52	64
	22	30		6250	1.08		5200	1.21	30-8827/19 -473	52	64
	30	40		8550	0.8		7100	1.0	40-8827/19 -473	52	64

성능 및 선정표(4P)2단 (Selection & Performance table - Double Reduction - 4P)

Ratio	Motor		50 Hz			60 Hz			Model	Dimension Dwg (Page)	
	CAP (KW)	Sym	Output Speed rpm	Output Torque Kgf.m	SF	Output Speed rpm	Output Torque Kgf.m	SF	CAP-Frame-Ratio	H	V
559 (43x13)	0.2	02	2.7	67	1.0	3.2	56	1.0	02-8811/08-559	48	60
					1.4			1.7	02-8813/08-559	48	60
	0.4	05		132	1.0		110	1.0	05-8814/08-559	48	60
					1.50			1.9	05-8816/09-559	48	60
	0.75	1		250	1.0		205	1.0	1-8816/09-559	48	60
					1.21			1.5	1-8817/09-559	48	60
					2.0			2.4	1-8818/10-559	50	62
	1.5	2		505	1.0		415	1.0	2-8817/10-559	48	60
					1.05			1.2	2-8818/10-559	50	62
					1.6			1.9	2-8819/11-559	50	62
	2.2	3		740	1.09		610	1.30	3-8819/13-559	50	62
					1.7			2.0	3-8821/13-559	50	62
	3.7	5		1240	1.0		1030	1.20	5-8821/13-559	50	62
					1.3			1.52	5-8822/13-559	52	64
	5.5	8		1850	0.8		1530	1.02	8-8822/13-559	52	64
					1.1			1.30	8-8823/16-559	52	64
					1.40			1.7	8-8824/16-559	52	64
	7.5	10		2520	0.8		2100	1.0	10-8823/16-559	52	64
					1.02			1.24	10-8824/16-559	52	64
					1.33			1.6	10-8825/17-559	52	64
	11	15		3700	1.0		3060	1.1	15-8825/17-559	52	64
					1.23			1.5	15-8826/19-559	52	64
					1.83			2.2	15-8827/19-559	52	64
	15	20		5050	1.0		4150	1.07	20-8826/19-559	52	64
					1.34			1.60	20-8827/19-559	52	64
	18.5	25		6230	1.09		5150	1.30	25-8827/19-559	52	64
	22	30		8620	1.0		6150	1.1	30-8827/19-559	52	64
649 (59x11)	0.2	02	2.3	78	1.0	2.8	65	1.0	02-8811/08-649	48	60
					1.10			1.4	02-8813/08-649	48	60
					1.7			2.1	02-8814/08-649	48	60
	0.4	05		155	0.9		125	1.0	05-8813/08-649	48	60
					1.0			1.0	05-8814/08-649	48	60
					1.4			1.6	05-8816/09-649	48	60
	0.75	1		290	1.0		240	1.0	1-8816/09-649	48	60
					1.04			1.3	1-8817/09-649	48	60
	1.5	2		585	1.7		485	2.0	1-8818/10-649	50	62
					1.0			1.0	2-8818/10-649	50	62
					1.3			1.6	2-8819/11-649	50	62
	2.2	3		860	1.0		710	1.0	3-8819/11-649	50	62
					1.10			1.3	3-8820/13-649	50	62
					1.44			1.8	3-8821/13-649	50	62
	3.7	5		1430	0.9		1150	1.04	5-8821/13-649	50	62
					1.10			1.31	5-8822/13-649	52	64
					1.4			1.7	5-8823/16-649	52	64
	5.5	8		2130	0.9		1760	1.0	8-8822/13-649	52	64
					1.0			1.1	8-8823/16-649	52	64
					1.20			1.41	8-8824/16-649	52	64
					1.6			1.9	8-8825/17-649	52	64
	7.5	10		2930	0.9		2430	1.04	10-8824/16-649	52	64
					1.2			1.4	10-8825/17-649	52	64
					1.5			1.9	10-8826/19-649	52	64
	11	15		4300	0.8		3550	1.0	15-8825/17-649	52	64
					1.06			1.3	15-8826/19-649	52	64
					1.6			1.9	15-8827/19-649	52	64
	15	20		5850	0.8		4850	1.0	20-8826/19-649	52	64
					1.2			1.4	20-8827/19-649	52	64
	18.5	25		7200	1.0		6000	1.09	25-8827/19-649	52	64
	22	30		8600	0.8		7100	1.0	30-8827/19-649	52	64

성능 및 선정표(4P)2단 (Selection & Performance table - Double Reduction - 4P)

Ratio	Motor		50 Hz			60 Hz			Model	Dimension Dwg (Page)	
	CAP (KW)	Sym	Output Speed rpm	Output Torque Kgf.m	SF	Output Speed rpm	Output Torque Kgf.m	SF	CAP-Frame-Ratio	H	V
731 (43x17)	0.2	02	2.1	88	1.1	2.5	73	1.3	02-8813/08-731	48	60
					1.4			1.9	02-8814/08-731	48	60
	0.4	05		175	1.0		145	1.0	05-8813/08-731	48	60
					1.2			1.4	05-8816/09-731	48	60
					1.8			2.1	05-8817/08-731	48	60
	0.75	1		330	1.0		272	1.1	1-8817/09-731	48	60
					1.5			1.8	1-8818/10-731	50	62
	1.5	2		660	1.0		545	1.0	2-8818/10-731	50	62
					1.2			1.4	2-8819/11-731	50	62
					1.5			1.8	2-8820/13-731	50	62
	2.2	3		970	0.8		803	1.0	3-8819/11-731	50	62
					1.3			1.6	3-8821/13-731	50	62
	3.7	5		1600	1.0		1330	1.0	5-8821/13-731	50	62
					1.0			1.2	5-8822/13-731	52	64
					1.3			1.5	5-8823/16-731	52	64
	5.5	8		2400	1.0		2000	1.0	8-8823/16-731	52	64
					1.07			1.3	8-8824/16-731	52	64
					1.4			1.7	8-8825/17-731	52	64
	7.5	10		3300	0.9		2700	1.0	10-8824/16-731	52	64
					1.02			1.2	10-8825/17-731	52	64
					1.4			1.7	10-8826/19-731	52	64
	11	15		4830	0.9		4000	1.0	15-8825/17-731	52	64
					1.0			1.12	15-8826/19-731	52	64
					1.4			1.67	15-8827/19-731	52	64
	15	20		6600	0.8		5450	1.0	20-8826/19-731	52	64
					1.03			1.2	20-8827/19-731	52	64
	18.5	25		8150	1.0		6750	1.0	25-8827/19-731	52	64
841 (29x29)	0.2	02	1.8	100	1.0	2.1	84	1.0	02-8813/08-841	48	60
					1.3			1.3	02-8814/09-841	48	60
	0.4	05		200	0.9		165	1.0	05-8814/09-841	48	60
					1.0			1.20	05-8816/09-841	48	60
					1.5			1.9	05-8817/09-841	48	60
	0.75	1		380	1.0		315	1.0	1-8817/10-841	48	60
					1.3			1.6	1-8818/10-841	50	62
					2.1			2.5	1-8819/11-841	50	62
	1.5	2		760	1.0		630	1.0	2-8818/10-841	50	62
					1.06			1.2	2-8819/11-841	50	62
					1.4			1.6	2-8821/13-841	50	62
	2.2	3		1110	1.0		920	1.0	3-8819/11-841	50	62
					1.1			1.3	3-8821/13-841	50	62
					1.3			1.60	3-8822/13-841	52	64
	3.7	5		1860	0.8		1550	1.0	5-8822/13-841	52	64
					1.0			1.2	5-8823/16-841	52	64
					1.4			1.6	5-8824/16-841	52	64
					1.7			2.1	5-8825/17-841	52	64
	5.5	8		2780	1.0		2310	1.1	8-8824/16-841	52	64
					1.1			1.4	8-8825/17-841	52	64
					1.6			2.0	8-8826/19-841	52	64
	7.5	10		3800	0.8		3150	1.0	10-8825/17-841	52	64
					1.2			1.4	10-8826/19-841	52	64
					1.8			2.2	10-8827/19-841	52	64
	11	15		5580	0.8		4620	1.0	15-8826/19-841	52	64
					1.2			1.5	15-8827/19-841	52	64
	15	20		7610	1.0		6310	1.1	20-8827/19-841	52	64

성능 및 선정표(4P)2단 (Selection & Performance table - Double Reduction - 4P)

Ratio	Motor		50 Hz			60 Hz			Model	Dimension Dwg (Page)	
	CAP (KW)	Sym	Output Speed rpm	Output Torque Kgf.m	SF	Output Speed rpm	Output Torque Kgf.m	SF	CAP-Frame-Ratio	H	V
1003 (59x17)	0.2	02	1.5	120	0.9	1.8	100	1.0	02-8813/08-1003	48	60
					1.1			1.3	02-8814/08-1003	48	60
	0.4	05		240	1.0		200	1.0	05-8816/09-1003	48	60
					1.32			1.6	05-8817/09-1003	48	60
	0.75	1		450	1.0		375	1.0	1-8817/09-1003	48	60
					1.1			1.3	1-8818/10-1003	50	62
					1.7			2.1	1-8819/11-1003	50	62
	1.5	2		905	0.7		750	0.8	2-8818/10-1003	50	62
					0.9			1.1	2-8819/11-1003	50	62
					1.1			1.3	2-8820/13-1003	50	62
	2.2	3		1320	1.0		1090	1.1	3-8821/13-1003	50	62
					1.2			1.4	3-8822/13-1003	52	64
					1.5			1.8	3-8823/16-1003	52	64
	3.7	5		2210	0.8		1850	1.0	5-8822/13-1003	52	64
					0.9			1.1	5-8823/16-1003	52	64
					1.1			1.4	5-8824/16-1003	52	64
					1.5			1.8	5-8825/17-1003	52	64
	5.5	8		3310	0.8		2730	1.0	8-8824/16-1003	52	64
					1.0			1.2	8-8825/17-1003	52	64
					1.4			1.7	8-8826/19-1003	52	64
	7.5	10		4520	0.8		3750	1.0	10-8825/17-1003	52	64
					1.0			1.2	10-8826/19-1003	52	64
					1.5			1.8	10-8827/19-1003	52	64
	11	15		6630	0.5		5500	1.0	15-8826/19-1003	52	64
					1.0			1.2	15-8827/19-1003	52	64
1247 (43x29)	0.2	02	1.2	150	0.9	1.4	125	1.0	02-8813/08-1247	48	60
					1.0			1.1	02-8814/08-1247	48	60
	0.4	05		300	0.8		245	1.0	05-8816/09-1247	48	60
					1.0			1.2	05-8817/09-1247	48	60
	0.75	1		560	0.8		465	0.9	1-8817/09-1247	48	60
					0.9			1.0	1-8818/10-1247	50	62
					1.4			1.7	1-8819/11-1247	50	62
	1.5	2		1250	0.8		1090	0.9	2-8819/11-1247	50	62
					0.9			1.0	2-8820/11-1247	50	62
					1.0			1.1	2-8821/13-1247	50	62
	2.2	3		1620	0.8		1350	0.9	3-8821/13-1247	50	62
					0.9			1.1	3-8822/13-1247	52	64
					1.2			1.4	3-8823/16-1247	52	64
					1.5			1.9	3-8824/16-1247	52	64
	3.7	5		2750	0.9		2300	1.0	5-8823/16-1247	52	64
					1.0			1.1	5-8824/16-1247	52	64
					1.2			1.5	5-8825/17-1247	52	64
	5.5	8		4100	0.7		3400	0.9	8-8824/16-1247	52	64
					0.8			1.0	8-8825/17-1247	52	64
					1.1			1.3	8-8826/19-1247	52	64
	7.5	10		5600	0.8		4650	1.0	10-8826/19-1247	52	64
					1.2			1.4	10-8827/19-1247	52	64
	11	15		8250	0.8		6850	1.0	15-8827/19-1247	52	64

성능 및 선정표(4P)2단 (Selection & Performance table - Double Reduction - 4P)

Ratio	Motor		50 Hz			60 Hz			Model	Dimension Dwg (Page)	
	CAP (KW)	Sym	Output Speed rpm	Output Torque Kgf.m	SF	Output Speed rpm	Output Torque Kgf.m	SF	CAP-Frame-Ratio	H	V
1479 (87x17)	0.4	05	1.0	355	0.8	1.2	295	0.9	05-8816/09-1479	48	60
					0.9			1.0	05-8817/09-1479	48	60
	0.75	1		660	0.9		550	1.0	1-8818/10 -1479	50	62
					1.2			1.4	1-8819/11 -1479	50	62
	1.5	2		1320	0.7		1100	0.8	2-8819/11 -1479	50	62
					0.9			1.0	2-8821/13 -1479	50	62
	2.2	3		1950	0.8		1600	0.9	3-8822/13-1479	52	64
					0.9			1.0	3-8823/16-1479	52	64
					1.1			1.4	3-8824/16-1479	52	64
	3.7	5		3300	0.9		2700	1.0	5-8824/16-1479	52	64
					1.0			1.1	5-8825/17-1479	52	64
	5.5	8		4900	0.8		4050	1.0	8-8825/17-1479	52	64
					0.9			1.1	8-8826/19-1479	52	64
	7.5	10		6600	1.0		5500	1.2	10-8827/19-1479	52	64
1849 (43x43)	0.4	05	0.81	183	1.0	0.97	183	1.0	05-8816/09-1849	48	60
				278	1.0		278	1.0	05-8817/09-1849	48	60
				404	1.01		337	1.22	05-8818/10-1849	50	52
	0.75	1		830	0.9		690	1.0	1-8818/10-1849	50	52
					1.0			1.16	1-8819/11 -1849	50	52
	1.5	2		1650	0.9		1350	1.0	2-8821/13 -1849	50	52
					1.0			1.14	2-8822/13-1849	52	64
	2.2	3		2440	0.8		2020	0.9	3-8822/13-1849	52	64
					0.9			1.0	3-8823/16-1849	52	64
					1.0			1.27	3-8824/16-1849	52	64
	3.7	5		4110	0.8		3410	0.9	5-8824/16-1849	52	64
					0.9			1.0	5-8825/17-1849	52	64

성능 및 선정표(4P)2단 (Selection & Performance table - Double Reduction - 4P)

Ratio	Motor		50 Hz			60 Hz			Model	Dimension Dwg (Page)	
	CAP (KW)	Sym	Output Speed rpm	Output Torque Kgf.m	SF	Output Speed rpm	Output Torque Kgf.m	SF	CAP-Frame-Ratio	H	V
2065 (59x35)	0.2	02	0.73	93	0.8	0.87	93	0.8	02-8813/08-2065	48	60
				125	0.8		125	0.9	02-8814/08-2065	48	60
				214	1.0		214	1.0	02-8816/09-2065	48	60
				321	1.23		321	1.48	02-8817/09-2065	48	60
	0.4	05		254	0.8		254	0.8	05-8816/09-2065	48	60
				321	0.9		321	0.9	05-8817/09-2065	48	60
				510	1.0		510	1.09	05-8818/10-2065	50	62
	0.75	1		510	0.8		510	0.9	1-8818/10-2065	50	62
				811	1.0		811	1.04	1-8819/11-2065	50	62
	1.5	2		948	0.8		948	0.9	2-8820/11-2065	50	62
				1290	0.9		1290	1.0	2-8821/13-2065	50	62
				1620	1.0		1620	1.02	2-8822/13-2065	52	64
	2.2	3		1620	0.8		1620	0.9	3-8822/13-2065	52	64
				2090	0.9		2090	1.0	3-8823/16-2065	52	64
				2630	1.0		2630	1.14	3-8824/16-2065	52	64
	3.7	5		2630	0.8		2630	0.9	5-8824/16-2065	52	64
				3520	0.9		3520	1.0	5-8825/17-2065	52	64
	5.5	8		4690	0.9		4690	1.0	8-8826/19-2065	52	64
				6950	1.0		6950	1.19	8-8827/19-2065	52	64
	7.5	10		6950	1.0		6950	1.0	10-8827/19-2065	52	64
2537 (59x43)	0.2	02	0.59	93	0.8	0.71	93	0.8	02-8813/08-2537	48	60
				125	0.8		125	0.9	02-8814/08-2537	48	60
				214	0.9		214	1.0	02-8816/09-2537	48	60
				321	1.0		321	1.20	02-8817/09-2537	48	60
	0.4	05		321	0.8		321	0.9	05-8817/09-2537	48	60
				510	1.0		510	1.0	05-8818/10-2537	50	62
	0.75	1		510	0.8		510	0.9	1-8818/10-2537	50	62
				811	0.9		811	0.9	1-8819/11-2537	50	62
				948	1.0		948	1.0	1-8820/11-2537	50	62
	1.5	2		948	0.8		948	0.9	2-8820/11-2537	50	62
				1290	0.9		1290	0.9	2-8821/13-2537	50	62
				1620	1.10		1620	1.0	2-8822/13-2537	52	64
	2.2	3		2090	0.8		2090	0.9	3-8823/16-2537	52	64
				2630	1.0		2630	1.0	3-8824/16-2537	52	64
	3.7	5		3520	1.0		3520	1.0	5-8825/17-2537	52	64
	5.5	8		4690	0.9		4690	0.9	8-8826/19-2537	52	64
				6950	1.0		6950	1.0	8-8827/19-2537	52	64
	7.5	10		6950	10		6950	10	10-8827/19-2537	52	64
3045 (87x35)	0.2	02	0.49	99	0.8	0.59	99	0.8	02-8813/08-3045	48	60
				125	0.8		125	0.9	02-8814/08-3045	48	60
				209	0.9		209	1.0	02-8816/09-3045	48	60
				321	1.0		321	1.0	02-8817/09-3045	48	60
	0.4	05		321	0.8		321	0.9	05-8817/09-3045	48	60
				510	1.0		510	1.0	05-8818/10-3045	50	62
	0.75	1		811	1.0		811	1.0	1-8819/11-3045	50	62
	1.5	2		1150	0.8		1150	0.9	2-8821/13-3045	50	62
				1540	1.0		1540	1.0	2-8822/13-3045	52	64
	2.2	3		1750	0.9		1750	0.9	3-8823/16-3045	52	64
				2310	1.0		2310	1.0	3-8824/16-3045	52	64
	3.7	5		3160	1.0		3160	1.0	5-8825/17-3045	52	64
	5.5	8		4490	0.9		4490	0.9	8-8826/17-3045	52	64
				6950	1.0		6950	1.0	8-8827/19-3045	52	64
	7.5	10		6950	1.0		6950	1.0	10-8827/19-3045	52	64

성능 및 선정표(4P)2단 (Selection & Performance table - Double Reduction - 4P)

Ratio	Motor		50 Hz			60 Hz			Model	Dimension Dwg (Page)	
	CAP (KW)	Sym	Output Speed rpm	Output Torque Kgf.m	SF	Output Speed rpm	Output Torque Kgf.m	SF	CAP-Frame-Ratio	H	V
3481 (59x59)	0.2	02	0.43	93	0.8	0.52	93	0.8	02-8813/08-3481	48	60
				125	0.8		125	0.9	02-8814/08-3481	48	60
				214	0.9		214	1.0	02-8816/09-3481	48	60
				321	1.0		321	1.0	02-8817/09-3481	48	60
	0.4	05		321	0.8		321	0.9	05-8817/09-3481	48	60
				510	1.0		510	1.0	05-8818/10-3481	50	62
	0.75	1		811	0.9		811	0.9	1-8819/11-3481	50	62
				948	1.0		893	1.0	1-8820/11-3481	50	62
	1.5	2		1290	0.8		1290	0.9	2-8821/13-3481	50	62
				1620	1.0		1620	1.0	2-8822/13-3481	52	64
	2.2	3		2090	0.9		2090	0.9	3-8823/16-3481	52	64
				2630	1.0		2630	1.0	3-8824/16-3481	52	64
	3.7	5		3520	1.0		3520	1.0	5-8825/17-3481	52	64
	5.5	8		4690	0.9		4690	0.9	8-8826/19-3481	52	64
				6950	1.0		6950	1.0	8-8827/19-3481	52	64
	7.5	10		6950	1.0		6950	1.0	10-8827/19-3481	52	64
4437 (87x51)	0.2	02	0.34	93	0.8	0.41	93	0.8	02-8813/08-4437	48	60
				125	0.8		125	0.9	02-8814/08-4437	48	60
				214	0.9		209	1.0	02-8816/09-4437	48	60
				321	1.0		321	1.0	02-8817/09-4437	48	60
	0.4	05		510	1.0		510	1.0	05-8818/10-4437	60	62
	0.75	1		811	1.0		811	1.0	1-8819/11-4437	60	62
	1.5	2		1150	0.8		1150	0.9	2-8821/13-4437	60	62
				1620	1.0		1540	1.0	2-8822/13-4437	52	64
	2.2	3		2090	0.8		1750	0.9	3-8823/16-4437	52	64
				2630	1.0		2310	1.0	3-8824/16-4437	52	64
	3.7	5		3520	1.0		3160	1.0	5-8825/17-4437	52	64
	5.5	8		4690	0.9		4690	0.9	8-8826/19-4437	52	64
				6950	1.0		6950	1.0	8-8827/19-4437	52	64
	7.5	10		6950	1.0		6950	1.0	10-8827/19-4437	52	64
5133 (87x59)	0.2	02	0.29	93	0.8	0.35	93	0.8	02-8813/08-5133	48	60
				125	0.8		125	0.9	02-8814/08-5133	48	60
				214	0.9		209	1.0	02-8816/09-5133	48	60
				321	1.0		321	1.0	02-8817/09-5133	48	60
	0.4	05		510	1.0		510	1.0	05-8818/10-5133	50	62
	0.75	1		811	0.9		811	0.9	1-8819/11-5133	50	62
				948	1.0		948	1.0	1-8820/11-5133	50	62
	1.5	2		1290	0.8		1290	0.9	2-8821/13-5133	50	62
				1620	1.0		1620	1.0	2-8822/13-5133	52	64
	2.2	3		2090	0.9		2090	0.9	3-8823/16-5133	52	64
				2630	1.0		2630	1.0	3-8824/16-5133	52	64
	3.7	5		3520	1.0		3520	1.0	5-8825/17-5133	52	64
	5.5	8		4690	0.8		4690	0.9	8-8826/19-5133	52	64
				6950	1.0		6950	1.0	8-8827/19-5133	52	64
	7.5	10		6950	1.0		6950	1.0	10-8827/19-5133	52	64

성능 및 선정표(4P)2단 (Selection & Performance table - Double Reduction - 4P)

Ratio	Motor		50 Hz			60 Hz			Model	Dimension Dwg (Page)	
	CAP (KW)	Sym	Output Speed rpm	Output Torque Kgf.m	SF	Output Speed rpm	Output Torque Kgf.m	SF	CAP-Frame-Ratio	H	V
6177 (87x71)	0.2	02	0.24	93	0.8	0.29	93	0.8	02-8813/09-6177	48	60
				125	0.8		125	0.9	02-8814/09-6177	48	60
				214	0.9		209	0.9	02-8816/09-6177	48	60
				321	1.0		321	1.0	02-8817/09-6177	48	60
	0.4	05		510	1.0		510	1.0	05-8818/10-6177	50	62
	0.75	1		811	1.0		811	1.0	1-8819/11-6177	50	62
	1.5	2		1290	0.8		1150	0.9	2-8821/13-6177	50	62
				1620	1.0		1540	1.0	2-8822/13-6177	52	64
	2.2	3		2090	0.9		1750	0.9	3-8823/16-6177	52	64
				2630	1.0		2310	1.0	3-8824/16-6177	52	64
	3.7	5		3520	1.0		3160	1.0	5-8825/17-6177	52	64
	5.5	8		4690	0.8		4690	0.9	8-8826/19-6177	52	64
				6950	1.0		6950	1.0	8-8827/19-6177	52	64
	7.5	10		6150	1.0		6150	1.0	10-8827/19-6177	52	64
7569 (87x87)	0.2	02	0.20	93	0.8	0.24	93	0.8	02-8813/09-7569	48	60
				125	0.8		125	0.9	02-8814/09-7569	48	60
				214	0.9		209	0.9	02-8816/09-7569	48	60
				321	1.0		321	1.0	02-8817/09-7569	48	60
	0.4	05		510	1.0		510	1.0	05-8818/10-7569	50	62
	0.75	1		811	1.0		811	1.0	1-8819/11-7569	50	62
	1.5	2		1290	0.8		1150	0.9	2-8821/13-7569	50	62
				1620	1.0		1540	1.0	2-8822/13-7569	52	64
	2.2	3		2090	0.8		1750	0.9	3-8823/16-7569	52	64
				2630	1.0		2310	1.0	3-8824/16-7569	52	64
	3.7	5		3520	1.0		3160	1.0	5-8825/17-7569	52	64
	5.5	8		4690	0.8		4690	0.9	8-8826/19-7569	52	64
				6950	1.0		6950	1.0	8-8827/19-7569	52	64
	7.5	10		6150	1.0		6150	1.0	10-8827/19-7569	52	64

KDVM 수직형 외형도 1단 (Dimension-Single Stage-Vertical)

● KVM 8807~8808

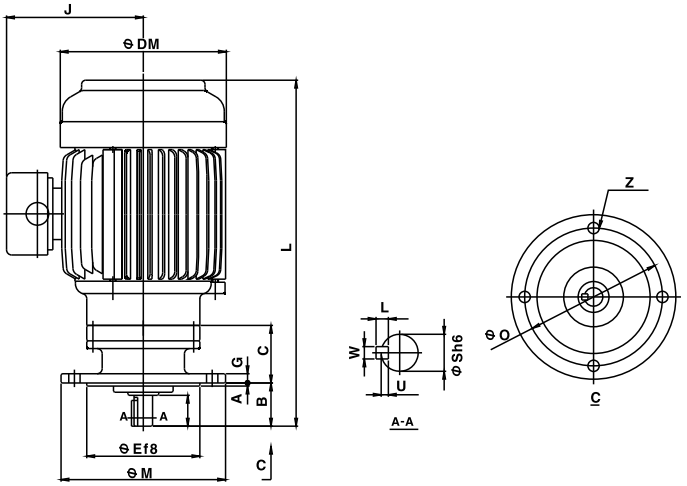

● KVM 8809~8812

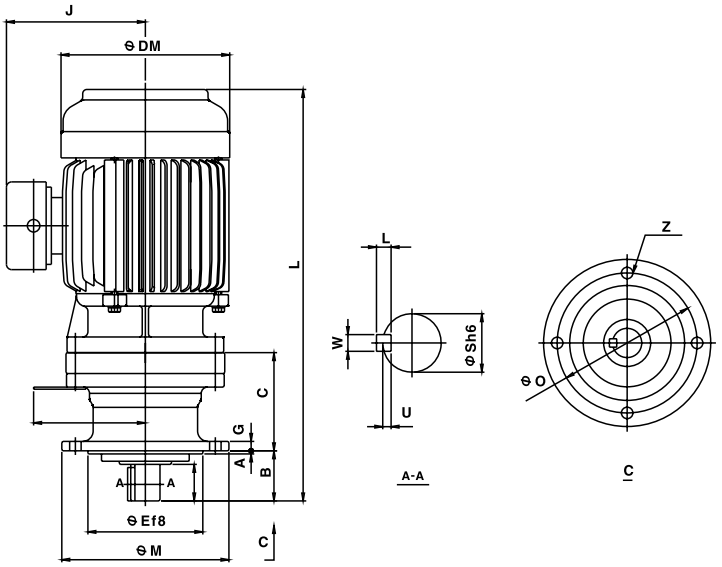

● KDVM 8813~8817

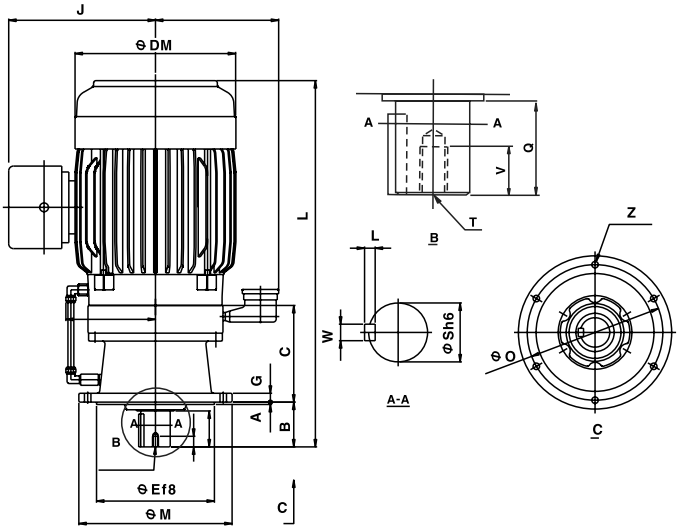

▶주의 : 전체길이 "L"은 모터의 연결방식과 Brake 부착에 따라 다소 길어짐.

KDVM 수직형 외형도 1단 (Dimension-Single Stage-Vertical)

Capacity (KW)	Model Model HP Frame	Dim.of Motor			Dim.of Side						Dim.of Flange		Dim.of Output					WT (Kg)
		L	J	DM	M	E	C	G	A	B	O	Z	T	V	Q	S	WXLYU	
0.2	KVM02-8807	311	121	144	120	80	58	8	3	34	102	6-Φ9			25	14	5X5X3	13
0.2	KVM02-8808	317	121	144	160	110	56	9	3	42	134	4-Φ11			30	18	6X6X3.5	14
0.4	KVM05-8808	388	132	162														16
0.2	KVM02-8809	361	121	144	160	110	94	9	3	48	134	4-Φ11			35	28	8X7X4	18
0.4	KVM05-8809	382	132	162														20
0.75	KVM1-8809	381	137	177														24
0.2	KVM02-8810	375	121	144	160	110	108	9	3	48	134	4-Φ11			35	28	8X7X4	20
0.4	KVM05-8810	396	132	162														22
0.75	KVM1-8810	395	137	177														26
1.5	KVM2-8810	432	150	200														35
2.2	KVM3-8810	467	173	219														45
0.4	KVM05-8811	425	132	162	210	140	117	13	4	69	180	6-Φ11			55	38	10X8X5	35
0.75	KVM1-8811	434	137	177														38
1.5	KVM2-8811	471	156	200														47
2.2	KVM3-8811	497	173	219														56
3.7	KVM5-8811	513	188	238														67
0.75	KVM1-8812	434	137	177	210	140	117	13	4	69	180	6-Φ11			55	38	10X8X5	38
2.2	KVM3-8812	497	173	219														56
3.7	KVM5-8812	513	188	238														67
5.5	KVM8-8812	557	223	273														86
0.75	KDVM1-8813	484	143	177	260	200	164	15	4	76	230	6-Φ11	M10	18	61	50	14X9X5.5	57
1.5	KDVM2-8813	524	150	200														66
2.2	KDVM3-8813	551	173	219														78
3.7	KDVM5-8813	570	187	238														89
5.5	KDVM8-8813	614	218	273														103
7.5	KDVM10-8813	652	223	273														115
0.75	KDVM1-8814	504	143	177	260	200	164	15	4	96	230	6-Φ11	M10	18	81	50	14X9X5.5	58
1.5	KDVM2-8814	544	150	200														67
2.2	KDVM3-8814	571	173	219														79
3.7	KDVM5-8814	590	187	238														90
5.5	KDVM8-8814	634	218	273														104
7.5	KDVM10-8814	672	223	273														116
0.75	KDVM1-8815	504	143	177	260	200	164	15	4	96	230	6-Φ11	M10	18	81	50	14X9X5.5	58
1.5	KDVM2-8815	544	150	200														67
2.2	KDVM3-8815	571	173	219														79
3.7	KDVM5-8815	590	187	238														90
5.5	KDVM8-8815	634	218	273														104
7.5	KDVM10-8815	672	223	273														116
11	KDVM15-8815	752	256	334														142
1.5	KDVM2-8816	593	150	200	340	270	219	20	4	89	310	6-Φ11	M10	18	80	60	18X11X7	103
2.2	KDVM3-8816	622	173	219														115
3.7	KDVM5-8816	641	187	238														125
5.5	KDVM8-8816	675	218	273														140
7.5	KDVM10-8816	713	223	273														152
11	KDVM15-8816	800	256	334														174
15	KDVM20-8816	844	256	334														191
3.7	KDVM5-8817	697	182	238	400	316	258	22	5	94	360	8-Φ14	M12	24	84	70	20X12X7.5	170
5.5	KDVM8-8817	731	218	273														185
7.5	KDVM10-8817	769	218	273														198
11	KDVM15-8817	844	256	334														199
15	KDVM20-8817	888	256	334														234
18.5	KDVM25-8817	911	305	382														301
22	KDVM30-8817	911	305	382														301

KDVM 수직형 외형도 1단 (Dimension-Single Stage-Vertical)

● KDVM 8818~8820

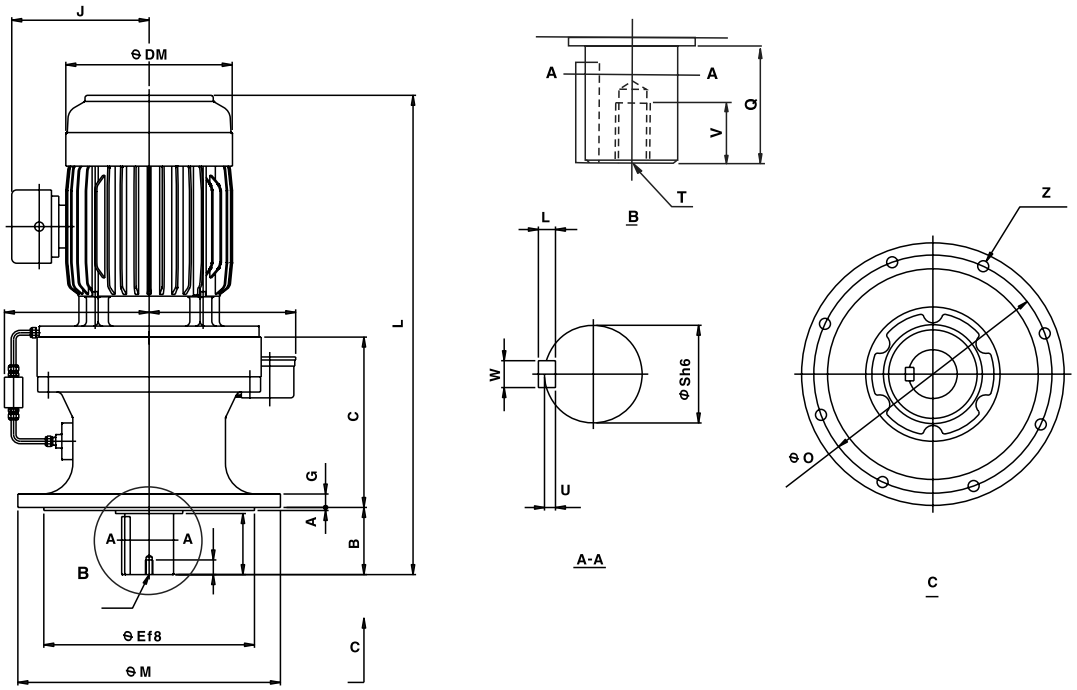

● KDVM 8821~8822

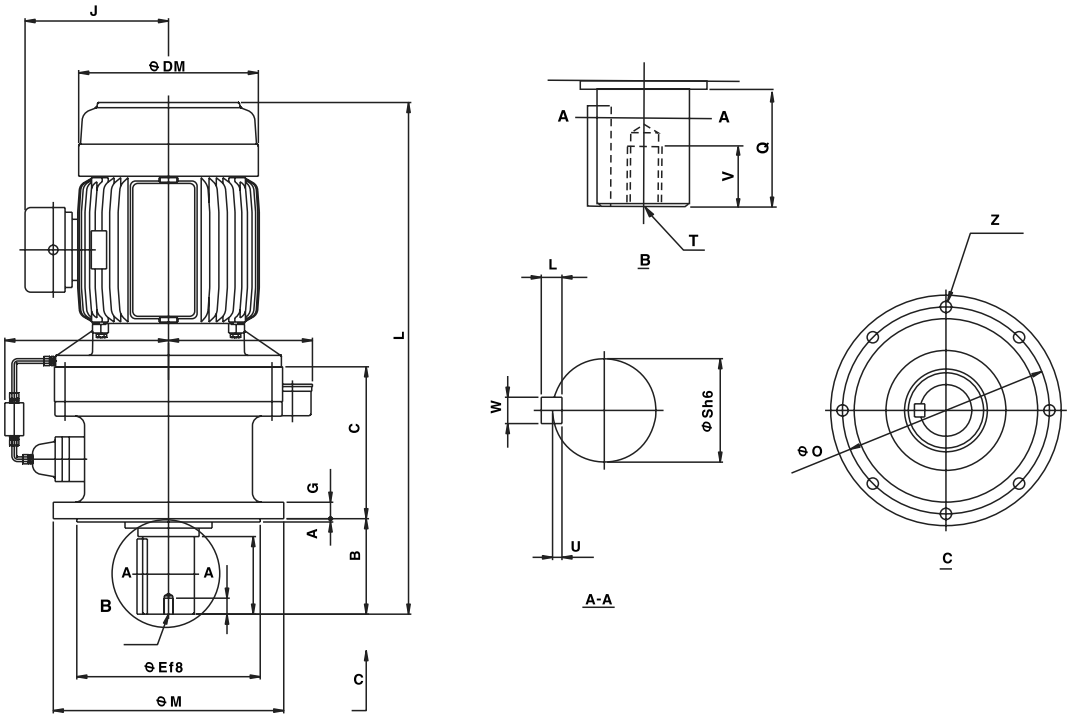

▶주의 : 전체길이 "L"은 모터의 연결방식과 Brake 부착에 따라 다소 길어짐.

KDVM 수직형 외형도 1단 (Dimension-Single Stage-Vertical)

Capacity (KW)	Model Model HP Frame	Dim.of Motor			Dim.of Side						Dim.of Flange		Dim.of Output					WT (Kg)
		L	J	DM	M	E	C	G	A	B	O	Z	T	V	Q	S	WXLYU	
3.7	KDVM5-8818	756	182	238	430	345	279	22	5	110	390	8-Φ18	M12	24	100	80	22X14X9	195
5.5	KDVM8-8818	775	218	273														211
7.5	KDVM10-8818	815	224	273														223
11	KDVM15-8818	883	256	334														261
15	KDVM20-8818	927	256	334														265
18.5	KDVM25-8818	950	305	382														327
22	KDVM30-8818	950	305	382														327
30	KDVM40-8818	988	305	382														344
5.5	KDVM8-8819	844	218	273	490	400	320	30	6	145	450	12-Φ18	M20	34	125	95	25X14X9	274
7.5	KDVM10-8819	888	224	273														285
11	KDVM15-8819	963	261	334														311
15	KDVM20-8819	1007	261	334														330
18.5	KDVM25-8819	1026	305	382														401
22	KDVM30-8819	1026	305	382														401
30	KDVM40-8819	1064	305	382														417
37	KDVM50-8819	1127	339	420														452
11	KDVM15-8820	1001	261	334	455	355	298	30	5	204	405	2-Φ22	M20	34	165	100	28X16X10	334
15	KDVM20-8820	1045	261	334														553
18.5	KDVM25-8820	1064	305	382														422
22	KDVM30-8820	1102	305	382														422
30	KDVM40-8820	1165	305	382														435
37	KDVM50-8820	1165	339	420														493
45	KDVM60-8820	1165	339	420														493
11	KDVM15-8821	1025	261	334	490	390	323	35	7	203	440	8-Φ24	M20	34	165	110	28X22X10	413
15	KDVM20-8821	1069	261	334														432
18.5	KDVM25-8821	1088	305	382														495
22	KDVM30-8821	1088	305	382														495
30	KDVM40-8821	1126	305	382														508
37	KDVM50-8821	1189	339	420														562
45	KDVM60-8821	1189	339	420														562
55	KDVM75-8821	1227	387	458														665
18.5	KDVM25-8822	1128	305	382	535	415	356	35	10	210	475	8-Φ27	M20	34	165	120	32X18X11	587
22	KDVM30-8822	1128	305	382														587
30	KDVM40-8822	1166	305	382														600
37	KDVM50-8822	1229	339	420														653
45	KDVM60-8822	1229	339	420														653
55	KDVM75-8822	1289	387	458														736

KDVM 수직형 외형도 1단(6P) (Dimension-Single Stage-Vertical-6P)

● KDVM 8823~8826

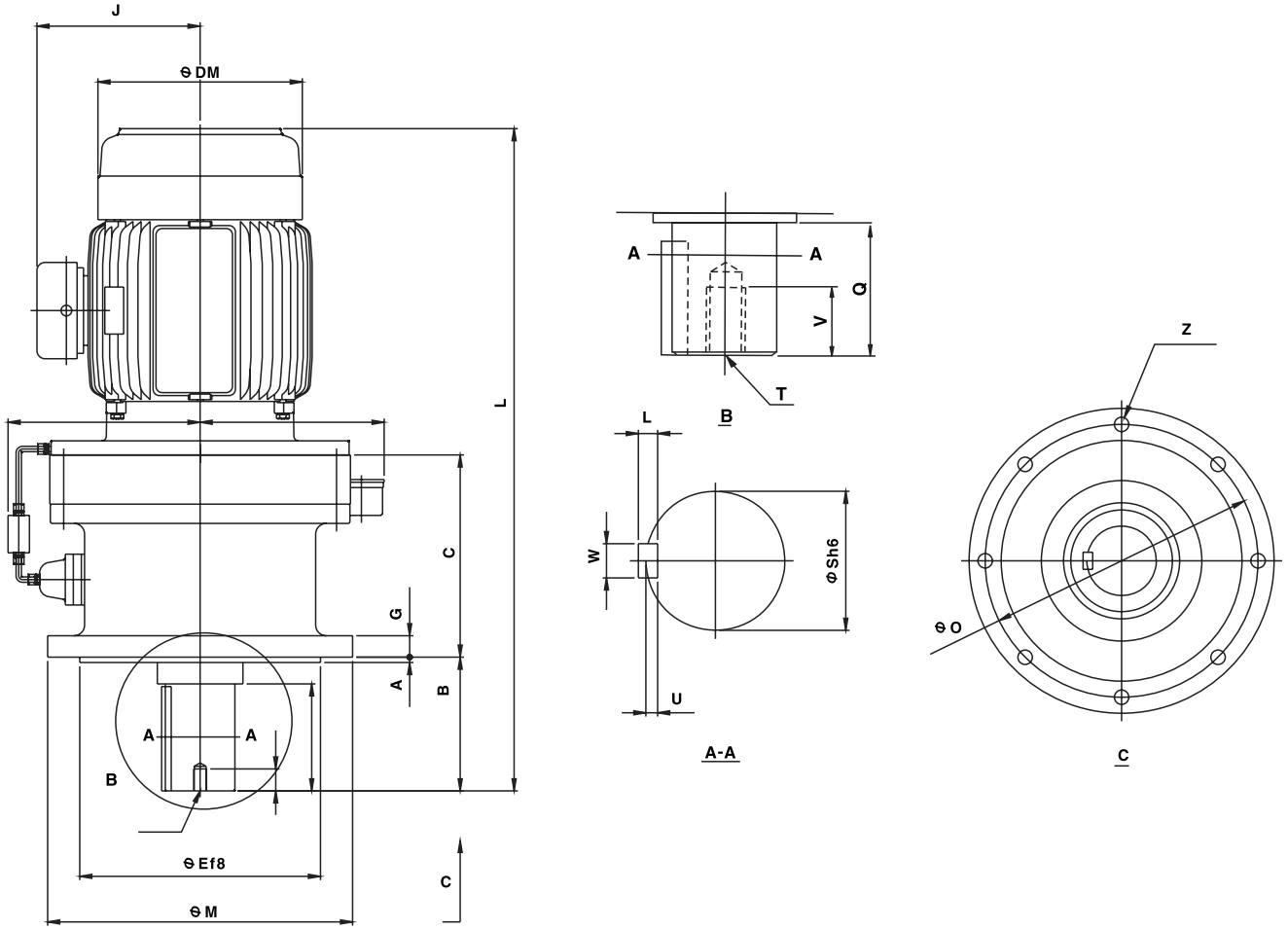

▶주의 : 전체길이 "L"은 모터의 연결방식과 Brake 부착에 따라 다소 길어짐.

KDVM 수직형 외형도 1단(6P) (Dimension-Single Stage-Vertical-6P)

Capacity (KW)	Model Model HP Frame	Dim.of Motor			Dim.of Side						Dim.of Flange		Dim.of Output					WT (Kg)
		L	J	DM	M	E	C	G	A	B	O	Z	T	V	Q	S	WXLYU	
15	KDVM20/6-8823	1200	305	382	570	450	378	40	10	250	510	8-Φ27	M24	41	200	130	32X18X11	647
18.5	KDVM25/6-8823	1238	305	382														665
22	KDVM30/6-8823	1238	305	382														665
30	KDVM40/6-8823	1400	339	420														739
37	KDVM50/6-8823	1400	339	420														739
45	KDVM60/6-8823	1430	387	458														799
55	KDVM75/6-8823	1492	515	542														854
15	KDVM20/6-8824	1225	305	382	635	485	407	40	10	250	560	8-Φ33	M24	41	200	140	36X20X12	753
18.5	KDVM25/6-8824	1263	305	382														711
22	KDVM30/6-8824	1263	305	382														711
30	KDVM40/6-8824	1345	339	420														845
37	KDVM50/6-8824	1345	339	420														845
45	KDVM60/6-8824	1383	387	458														907
55	KDVM75/6-8824	1572	515	542														956
18.5	KDVM25/6-8825	1390	305	382	685	535	480	45	10	295	610	8-Φ33	M30	49	240	160	40X22X13	1059
22	KDVM30/6-8825	1390	305	382														1059
30	KDVM40/6-8825	1453	339	420														1138
37	KDVM50/6-8825	1453	339	420														1138
45	KDVM60/6-8825	1491	387	458														1188
55	KDVM75/6-8825	1540	515	542														1239
30	KDVM40/6-8826	1570	339	420	750	570	532	50	10	360	660	8-Φ39	M30	49	300	170	40X22X13	1388
37	KDVM50/6-8826	1570	339	420														1388
45	KDVM60/6-8826	1680	387	458														1464

KDVM 수직형 외형도 2단(4P) (Dimension-Double Stage-Vertical-4P)

● KDVM(KVM)
8807/07~8808/07

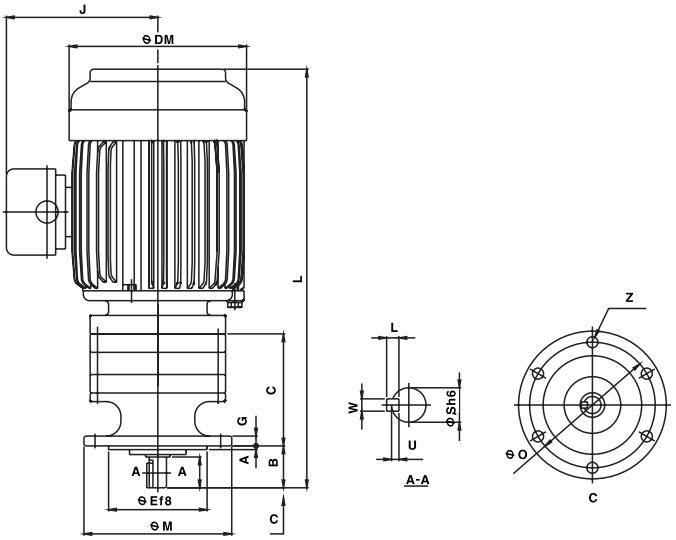

● KDVM
8809/08~8814/10

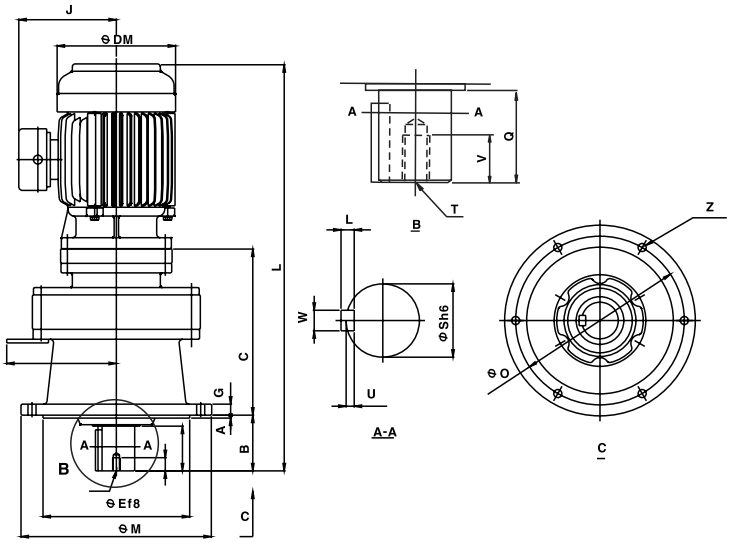

● KDVM
8816/09~8817/11

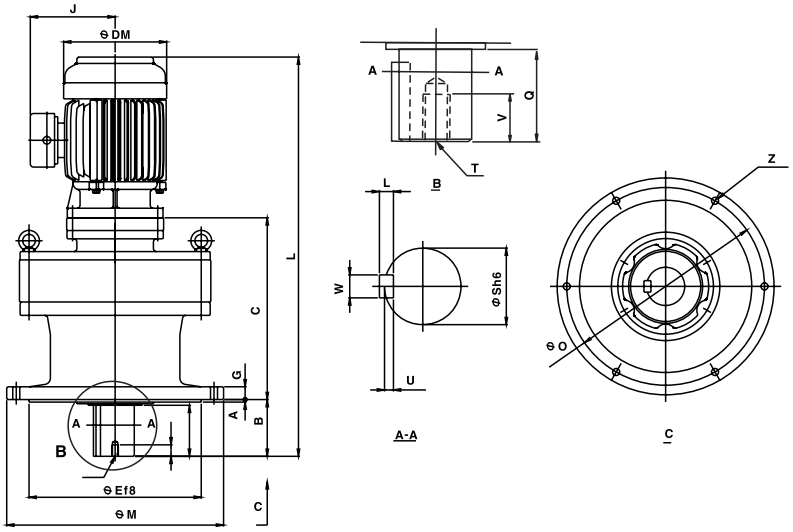

▶주의 : 전체길이 "L"은 모터의 연결방식과 Brake 부착에 따라 다소 길어짐.

KDVM 수직형 외형도 2단(4P) (Dimension-Double Stage-Vertical-4P)

Capacity (KW)	Model Model HP Frame	Dim.of Motor			Dim.of Side						Dim.of Flange		Dim.of Output					WT (Kg)
		L	J	DM	M	E	C	G	A	B	O	Z	T	V	Q	S	WXLYU	
	KVM-8807/07				120	80	91	8	3	34	102	6-Φ9			25	14	5X5X3	
	KVM-8808/07				160	110	89	9	3	42	134	4-Φ11			30	18	6X6X3.5	
0.2	KVM02-8809/08	409	121	144	160	110	142	9	3	48	134	4-Φ11			35	28	8X7X4	21
0.2 0.4	KVM02-8810/08 KVM05-8810/08	433 444	121 132	144 162	160	110	156	9	3	48	134	4-Φ11			35	28	8X7X4	22 25
0.2 0.4	KVM02-8811/08 KVM05-8811/08	459 480	121 132	144 167	210	140	171	13	4	69	180	6-Φ11			55	38	10X8X5	33 37
0.2 0.4 0.75	KVM02-8811/09 KVM05-8811/09 KVM1-8811/09	471 497 491	121 132 137	144 162 177	210	140	183	13	4	69	180	6-Φ11			55	38	10X8X5	39 42 44
0.2 0.4	KDVM02-8813/08 KDVM05-8813/08	513 557	121 132	144 162	260	200	218	15	4	76	230	6-Φ11	M10	18	61	50	14X9X5.5	47 52
0.2 0.4 0.75	KDVM02-8813/09 KDVM05-8813/09 KDVM1-8813/09	522 543 542	121 132 137	144 162 177	260	200	227	15	4	76	230	6-Φ11	M10	18	61	50	14X9X5.5	52 56 59
0.4 0.75 1.5 2.2	KDVM05-8813/10 KDVM1-8813/10 KDVM2-8813/10 KDVM3-8813/10	557 556 593 619	132 137 150 173	162 177 200 219	260	200	241	15	4	76	230	6-Φ11	M10	18	61	50	14X9X5.5	57 59 68 80
0.2 0.4	KDVM02-8814/08 KDVM05-8814/08	553 554	121 132	144 162	260	200	218	15	4	96	230	6-Φ11	M10	18	81	50	14X9X5.5	48 52
0.2 0.4 0.75	KDVM02-8814/09 KDVM05-8814/09 KDVM1-8814/09	542 563 562	121 132 137	144 162 177	260	200	227	15	4	96	230	6-Φ11	M10	18	81	50	14X9X5.5	52 56 59
0.4 0.75 1.5 2.2	KDVM05-8814/10 KDVM1-8814/10 KDVM2-8814/10 KDVM3-8814/10	577 576 613 640	132 137 150 173	162 177 200 219	260	200	241	15	4	96	230	6-Φ11	M10	18	81	50	14X9X5.5	58 60 69 81
0.2 0.4 0.75	KDVM02-8816/09 KDVM05-8816/09 KDVM1-8816/09	592 613 612	121 132 137	144 162 177	340	270	285	20	4	89	310	6-Φ11	M10	18	80	60	18X11X7	88 92 94
0.4 0.75 1.5 2.2	KDVM05-8816/10 KDVM1-8816/10 KDVM2-8816/10 KDVM3-8816/10	627 626 663 690	132 137 150 173	162 177 200 219	340	270	299	20	4	89	310	6-Φ11	M10	18	80	60	18X11X7	93 96 105 117
0.4 0.75 1.5 2.2 3.7	KDVM05-8816/11 KDVM1-8816/11 KDVM2-8816/11 KDVM3-8816/11 KDVM5-8816/11	628 637 674 700 716	132 137 150 173 188	162 177 200 219 238	340	270	300	20	4	89	310	6-Φ11	M10	18	80	60	18X11X7	95 100 111 126 135
0.2 0.4 0.75	KDVM02-8817/09 KDVM05-8817/09 KDVM1-8817/09	637 658 657	121 132 137	144 162 177	400	316	324	22	5	94	360	8-Φ14	M12	24	84	70	20X12X7.5	125 127 131
0.4 0.75 1.5 2.2	KDVM05-8817/10 KDVM1-8817/10 KDVM2-8817/10 KDVM3-8817/10	672 671 708 735	132 137 150 173	162 177 200 219	400	316	338	22	5	94	360	8-Φ14	M12	24	84	70	20X12X7.5	130 133 142 154
0.4 0.75 1.5 2.2 3.7	KDVM05-8817/11 KDVM1-8817/11 KDVM2-8817/11 KDVM3-8817/11 KDVM5-8817/11	675 684 721 747 763	132 137 156 173 188	162 177 200 219 238	400	316	342	22	5	94	360	8-Φ14	M12	24	84	70	20X12X7.5	132 138 149 161 168

KDVM 수직형 외형도 2단(4P) (Dimension-Double Stage-Vertical-4P)

● KDVM 8818/10~8821/16

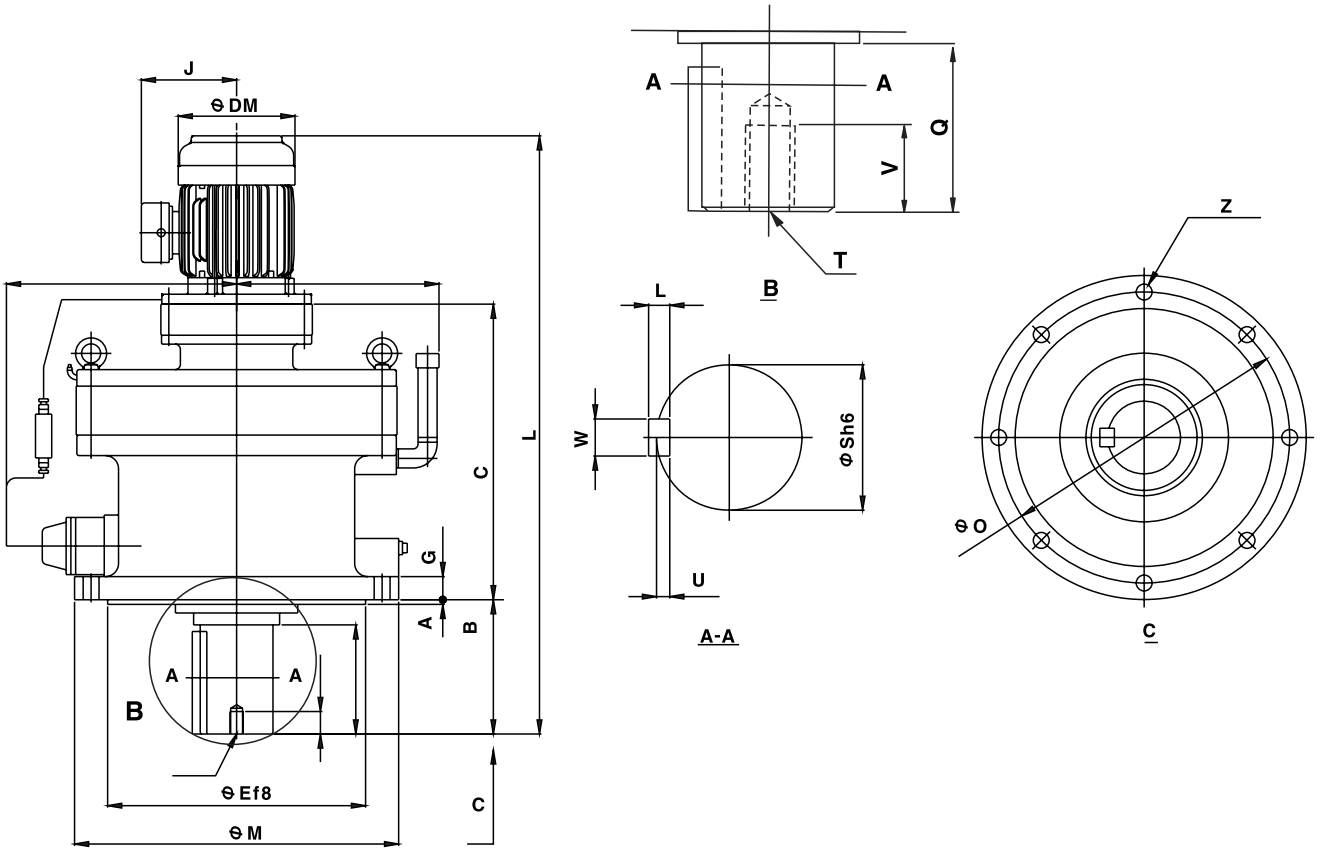

▶주의 : 전체길이 "L"은 모터의 연결방식과 Brake 부착에 따라 다소 길어짐.

KDVM 수직형 외형도 2단(4P) (Dimension-Double Stage-Vertical-4P)

Capacity (KW)	Model Model HP Frame	Dim.of Motor			Dim.of Side						Dim.of Flange		Dim.of Output					WT (Kg)
		L	J	DM	M	E	C	G	A	B	O	Z	T	V	Q	S	WXLYU	
0.4	KDVM05-8818/10	714	132	162	430	345	364	22	5	110	390	8-Φ18	M12	24	100	80	22X14X9	159
0.75	KDVM1-8818/10	713	137	177														163
1.5	KDVM2-8818/10	750	150	200														172
2.2	KDVM3-8818/10	799	173	219														184
0.75	KDVM1-8818/13	740	137	177	430	345	356	22	5	110	390	8-Φ18	M12	24	100	80	22X14X9	181
1.5	KDVM2-8818/13	780	150	200														193
2.2	KDVM3-8818/13	807	173	219														205
3.7	KDVM5-8818/13	826	187	238														210
5.5	KDVM8-8818/13	870	218	273														216
7.5	KDVM10-8818/13	908	223	273														222
0.4	KDVM05-8819/11	795	132	162	490	400	411	30	6	145	450	12-Φ18	M20	34	125	95	25X14X9	233
0.75	KDVM1-8819/11	804	137	177														244
1.5	KDVM2-8819/11	841	150	200														253
2.2	KDVM3-8819/11	867	173	219														265
3.7	KDVM5-8819/11	883	188	238														274
0.75	KDVM1-8819/13	816	143	177	490	400	427	30	6	145	450	12-Φ18	M20	34	125	95	25X14X9	251
1.5	KDVM2-8819/13	856	150	200														263
2.2	KDVM3-8819/13	883	173	219														274
3.7	KDVM5-8819/13	902	187	238														283
5.5	KDVM8-8819/13	946	218	273														289
7.5	KDVM10-8819/13	984	223	273														301
0.4	KDVM05-8820/11	836	132	162	455	355	393	30	5	204	405	8-Φ22	M20	34	165	100	28X16X10	254
0.75	KDVM1-8820/11	845	137	177														262
1.5	KDVM2-8820/11	882	150	200														269
2.2	KDVM3-8820/11	908	173	219														275
3.7	KDVM5-8820/11	924	188	238														281
0.75	KDVM1-8820/13	868	143	177	455	355	420	30	5	204	405	8-Φ22	M20	34	165	100	28X16X10	273
1.5	KDVM2-8820/13	908	150	200														284
2.2	KDVM3-8820/13	935	173	219														294
3.7	KDVM5-8820/13	954	187	238														303
5.5	KDVM8-8820/13	998	218	273														311
7.5	KDVM10-8820/13	1036	223	273														313
0.75	KDVM1-8821/13	894	143	177	490	390	447	35	7	203	440	8-Φ24	M20	34	165	110	28X16X10	329
1.5	KDVM2-8821/13	934	150	200														342
2.2	KDVM3-8821/13	961	173	219														354
3.7	KDVM5-8821/13	980	187	238														361
5.5	KDVM8-8821/13	1024	218	273														365
7.5	KDVM10-8821/13	1062	223	273														373
2.2	KDVM3-8821/16	989	173	219	490	390	472	35	7	203	440	8-Φ24	M20	34	165	110	28X16X10	365
3.7	KDVM5-8821/16	1008	182	238														375
5.5	KDVM8-8821/16	1042	219	273														384
7.5	KDVM10-8821/16	1080	219	273														387
11	KDVM15-8821/16	1167	256	334														412

KDVM 수직형 외형도 2단(4P) (Dimension-Double Stage-Vertical-4P)

● KDVM 8822/13~8825/17

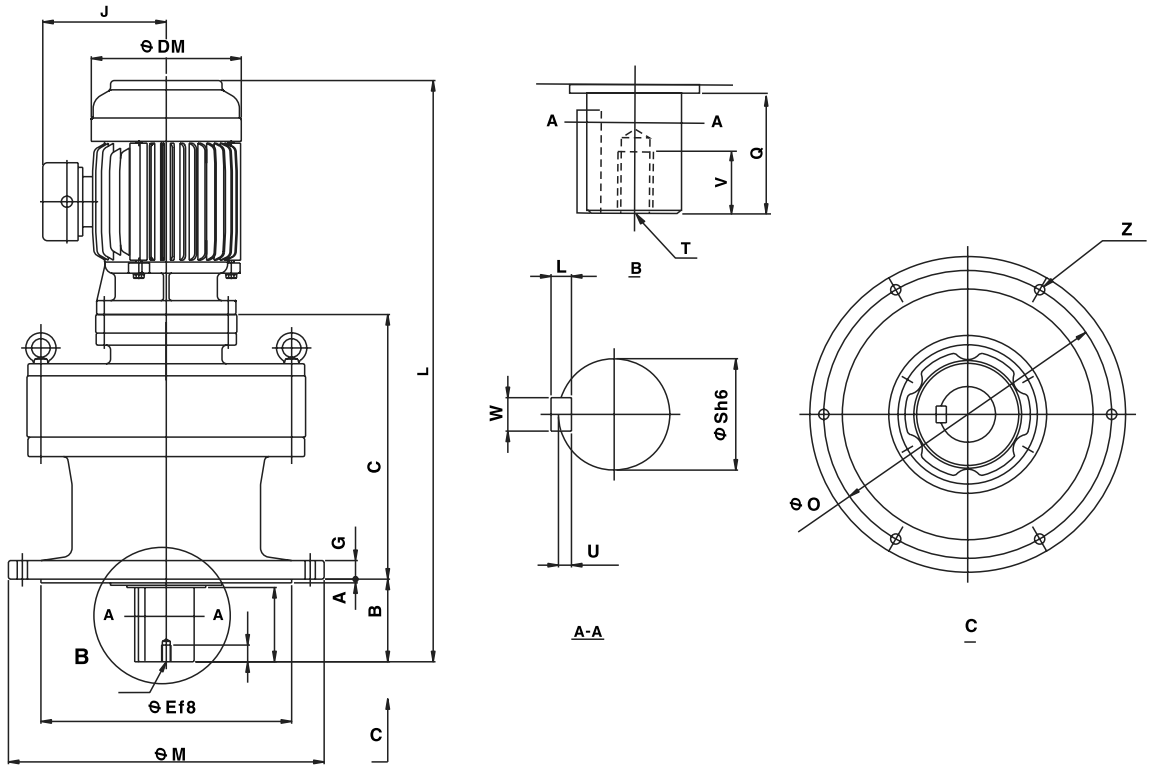

● KDVM 8825/19~8827/19

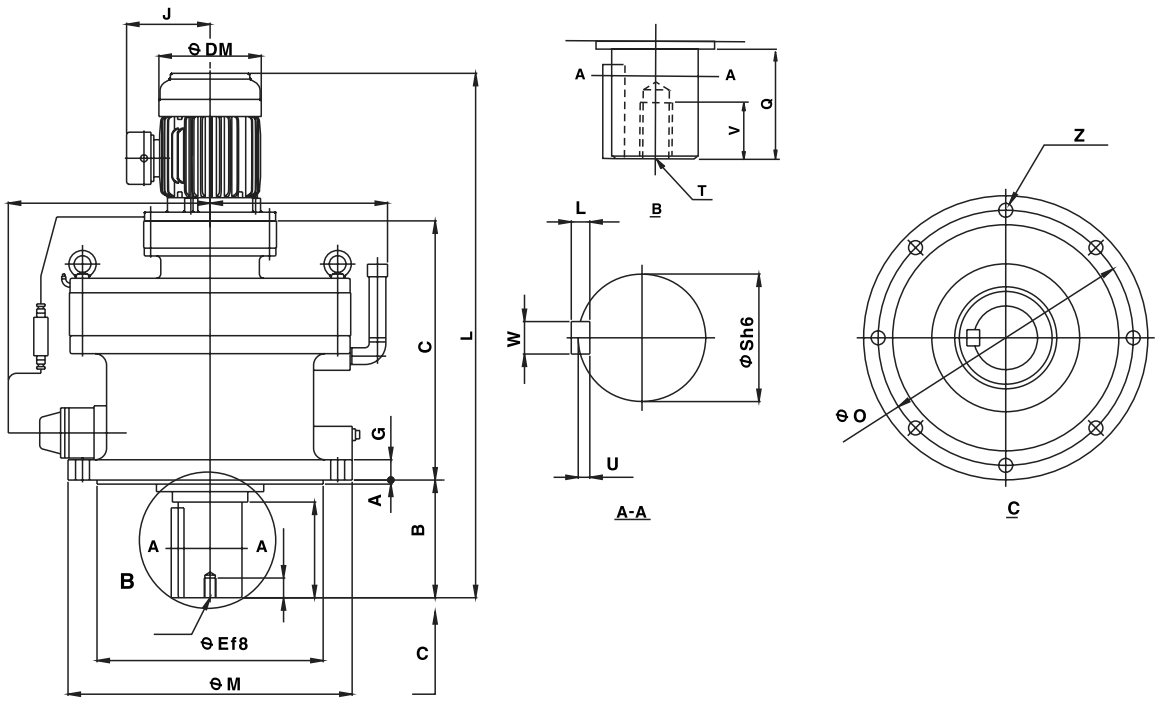

▶주의 : 전체길이 "L"은 모터의 연결방식과 Brake 부착에 따라 다소 길어짐.

KDVM 수직형 외형도 2단(4P) (Dimension-Double Stage-Vertical-4P)

Capacity (KW)	Model Model HP Frame	Dim.of Motor			Dim.of Side						Dim.of Flange		Dim.of Output					WT (Kg)
		L	J	DM	M	E	C	G	A	B	O	Z	T	V	Q	S	WXLYU	
0.75	KDVM1-8822/13	936	143	177	535	415	482	35	10	210	475	8-Φ27	M20	34	165	120	32X18X11	419
1.5	KDVM2-8822/13	976	150	200														432
2.2	KDVM3-8822/13	1003	173	219														444
3.7	KDVM5-8822/13	1022	187	238														449
5.5	KDVM8-8822/13	1066	218	273														453
7.5	KDVM10-8822/13	1104	223	273														461
3.7	KDVM5-8822/17	1080	182	238	535	415	525	35	10	210	475	8-Φ27	M20	34	165	120	32X18X11	437
5.5	KDVM8-8822/17	1114	218	273														450
7.5	KDVM10-8822/17	1152	218	273														462
11	KDVM15-8822/17	1227	256	334														513
15	KDVM20-8822/17	1271	256	334														567
2.2	KDVM3-8823/16	1092	173	219	570	450	529	40	10	250	510	8-Φ27	M24	41	200	130	32X18X11	526
3.7	KDVM5-8823/16	1111	182	238														548
5.5	KDVM8-8823/16	1145	219	273														556
7.5	KDVM10-8823/16	1183	219	273														569
11	KDVM15-8823/16	1270	256	334														603
15	KDVM20-8823/16	1314	256	334														622
7.5	KDVM10-8823/18	1226	224	273	570	450	551	40	10	250	510	8-Φ27	M24	41	200	130	32X18X11	572
11	KDVM15-8823/18	1294	256	334														656
15	KDVM20-8823/18	1338	256	334														661
18.5	KDVM25-8823/18	1361	305	382														723
22	KDVM30-8823/18	1361	305	382														723
2.2	KDVM3-8824/16	1130	173	219	635	485	566	40	10	250	560	8-Φ33	M24	41	200	140	36X20X12	622
3.7	KDVM5-8824/16	1149	183	236														634
5.5	KDVM8-8824/16	1183	219	273														650
7.5	KDVM10-8824/16	1221	219	273														665
11	KDVM15-8824/16	1308	256	334														697
15	KDVM20-8824/16	1352	256	334														716
7.5	KDVM10-8824/18	1263	224	273	635	485	587	40	10	250	560	8-Φ33	M24	41	200	140	36X20X12	655
11	KDVM15-8824/18	1331	256	334														688
15	KDVM20-8824/18	1375	256	334														748
18.5	KDVM25-8824/18	1398	305	382														812
22	KDVM30-8824/18	1398	305	382														812
3.7	KDVM5-8825/17	1301	182	238	685	535	661	45	10	295	610	8-Φ33	M30	49	240	160	40X22X13	968
5.5	KDVM8-8825/17	1335	218	273														984
7.5	KDVM10-8825/17	1373	218	273														993
11	KDVM15-8825/17	1448	256	334														1035
15	KDVM20-8825/17	1492	256	334														1041
18.5	KDVM25-8825/17	1517	305	382														1105
22	KDVM30-8825/17	1517	305	382														1105
7.5	KDVM10-8825/19	1401	224	273	685	535	684	45	10	295	610	8-Φ33	M30	49	240	160	40X22X13	1001
11	KDVM15-8825/19	1476	261	334														1057
15	KDVM20-8825/19	1520	261	334														1108
18.5	KDVM25-8825/19	1539	305	382														1181
22	KDVM30-8825/19	1539	305	382														1181
30	KDVM40-8825/19	1577	305	382														1195
5.5	KDVM8-8826/19	1473	224	273	750	570	728	50	10	360	660	8-Φ39	M30	49	300	170	40X22X13	1181
7.5	KDVM10-8826/19	1511	224	273														1193
11	KDVM15-8826/19	1586	261	334														1324
15	KDVM20-8826/19	1630	261	334														1374
18.5	KDVM25-8826/19	1649	305	382														1451
22	KDVM30-8826/19	1649	305	382														1451
30	KDVM40-8826/19	1687	305	382														1465
37	KDVM50-8826/19	1750	339	420														1499
5.5	KDVM8-8827/19	1734	224	273	1160	900	994	60	10	355	1020	8-Φ39	M30	52	320	180	45X25X15	2618
7.5	KDVM10-8827/19	1772	224	273														2713
11	KDVM15-8827/19	1847	261	334														2740
15	KDVM20-8827/19	1891	261	334														2759
18.5	KDVM25-8827/19	1910	305	382														2834
22	KDVM30-8827/19	1910	305	382														2834
30	KDVM40-8827/19	1948	305	382														2850
37	KDVM50-8827/19	2011	339	420														2883